AST Advantage! (250-0403/04) Layout Faxback Doc. # 3557
6033s/6066d

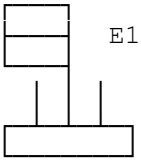

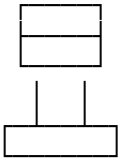

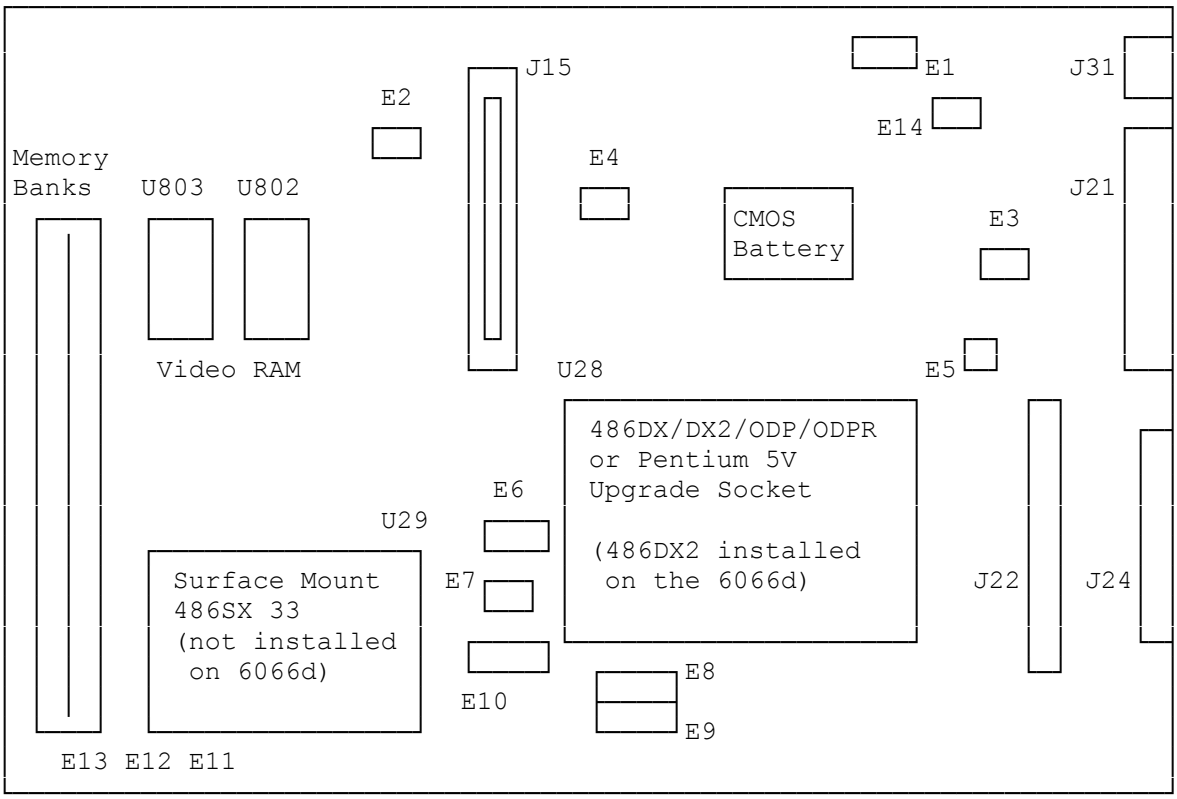

(jjs/all-12/09/94)