2100 (250-1624) Layout Faxback Doc. # 2674

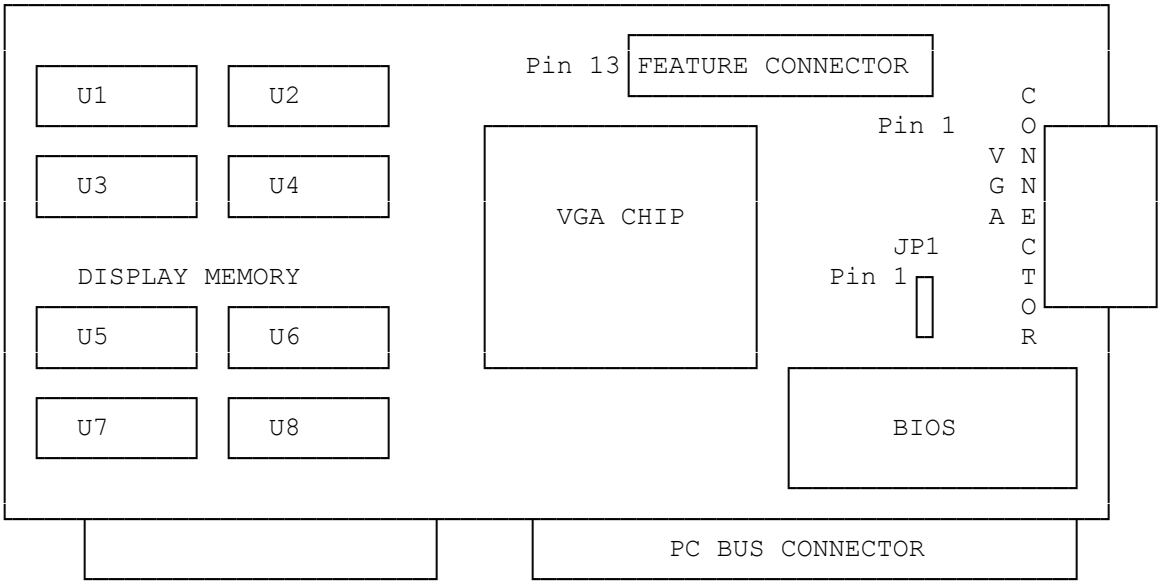

(smc-11/04/93)