PIONEER®
*The Art of Entertainment*

1818

# Service Manual

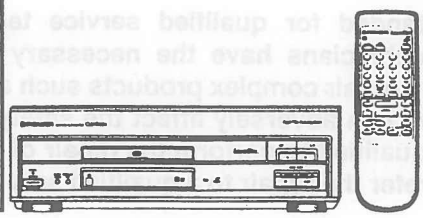

ORDER NO.
**RRV1693**

## CD CDV LD PLAYER
# CLD-D406

**THIS MANUAL IS APPLICABLE TO THE FOLLOWING MODEL(S) AND TYPE(S).**

| Type | Model | Power Requirement | Remarks |
|---|---|---|---|
| | CLD-D406 | | |
| KU | ○ | AC120V | |
| KC | ○ | AC120V | |

## CONTENTS


1. SAFETY INFORMATION ..... 2
2. EXPLODED VIEWS AND PARTS LIST ..... 3
3. SCHEMATIC DIAGRAMS ..... 14
4. PCB CONNECTION DIAGRAMS ..... 26
5. PCB PARTS LIST ..... 33
6. ADJUSTMENTS ..... 36
7. GENERAL INFORMATION ..... 48
7.1 PARTS ..... 48
7.1.1 IC ..... 48
7.1.2 DISPLAY ..... 57
7.2 DIAGNOSIS ..... 58
7.2.1 SELF-DIAGNOSTIC FUNCTIONS ..... 58
7.2.2 AGEING MODE ..... 60
7.2.3 DISASSEMBLY/ASSEMBLY ..... 61
7.3 EXPLANATION ..... 64
7.3.1 BLOCK DIAGRAM ..... 64
7.3.2 DIAGNOSTIC LAND MARK AND PATTERN ..... 70
8. PANEL FACILITIES AND SPECIFICATIONS ..... 71



**PIONEER ELECTRONIC CORPORATION** 4-1, Meguro 1-Chome, Meguro-ku, Tokyo 153, Japan
**PIONEER ELECTRONICS SERVICE, INC.** P.O. Box 1760, Long Beach, CA 90801-1760, U.S.A.
**PIONEER ELECTRONIC (EUROPE) N.V.** Haven 1087, Keetberglaan 1, 9120 Melsele, Belgium
**PIONEER ELECTRONICS ASIACENTRE PTE. LTD.** 501 Orchard Road, #10-00 Lane Crawford Place, Singapore 0923


**© PIONEER ELECTRONIC CORPORATION 1996**


T-IZB SEPT. 1996 Printed in Japan

# 1. SAFETY INFORMATION

**This service manual is intended for qualified service technicians; it is not meant for the casual do-it-yourselfer. Qualified technicians have the necessary test equipment and tools, and have been trained to properly and safely repair complex products such as those covered by this manual.**
**Improperly performed repairs can adversely affect the safety and reliability of the product and may void the warranty. If you are not qualified to perform the repair of this product properly and safely, you should not risk trying to do so and refer the repair to a qualified service technician.**

WARNING
**Lead in solder used in this product is listed by the California Health and Welfare agency as a known reproductive toxicant which may cause birth defects or other reproductive harm (California Health & Safety Code, Section 25249.5).**
**When servicing or handling circuit boards and other components which contain lead in solder, avoid unprotected skin contact with the solder. Also, when soldering do not inhale any smoke or fumes produced.**

NOTICE
(FOR CANADIAN MODEL ONLY)
Fuse symbols -▮▭▮- (fast operating fuse) and/or -▮▭⊠- (slow operating fuse) on PCB indicate that replacement parts must be of identical designation.

REMARQUE
(POUR MODÈLE CANADIEN SEULEMENT)
Les symboles de fusible -▮▭▮- (fusible de type rapide) et/ou -▮▭⊠- (fusible de type lent) sur CCI indiquent que les pièces de remplacement doivent avoir la même désignation.

(FOR USA MODEL ONLY)

## 1. SAFETY PRECAUTIONS

The following check should be performed for the continued protection of the customer and service technician.

**LEAKAGE CURRENT CHECK**

Measure leakage current to a known earth ground (water pipe, conduit, etc.) by connecting a leakage current tester such as Simpson Model 229-2 or equivalent between the earth ground and all exposed metal parts of the appliance (input/output terminals, screwheads, metal overlays, control shaft, etc.). Plug the AC line cord of the appliance directly into a 120V AC 60Hz outlet and turn the AC power switch on. Any current measured must not exceed 0.5mA.

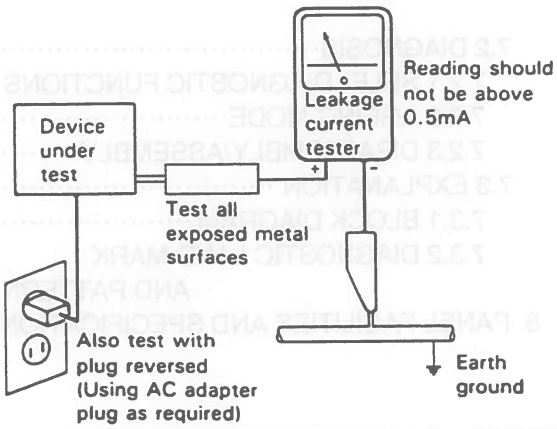


AC Leakage Test

**ANY MEASUREMENTS NOT WITHIN THE LIMITS OUTLINED ABOVE ARE INDICATIVE OF A POTENTIAL SHOCK HAZARD AND MUST BE CORRECTED BEFORE RETURNING THE APPLIANCE TO THE CUSTOMER.**

## 2. PRODUCT SAFETY NOTICE

Many electrical and mechanical parts in the appliance have special safety related characteristics. These are often not evident from visual inspection nor the protection afforded by them necessarily can be obtained by using replacement components rated for voltage, wattage, etc. Replacement parts which have these special safety characteristics are identified in this Service Manual.

Electrical components having such features are identified by marking with a ⚠ on the schematics and on the parts list in this Service Manual.
The use of a substitute replacement component which dose not have the same safety characteristics as the PIONEER recommended replacement one, shown in the parts list in this Service Manual, may create shock, fire, or other hazards.

Product Safety is continuously under review and new instructions are issued from time to time. For the latest information, always consult the current PIONEER Service Manual. A subscription to, or additional copies of, PIONEER Service Manual may be obtained at a nominal charge from PIONEER.

# 2. EXPLODED VIEWS AND PARTS LIST

*NOTES:*
- *Parts marked by "NSP" are generally unavailable because they are not in our Master Spare Parts List.*
- *The ⚠ mark found on some component parts indicates the importance of the safety factor of the part. Therefore, when replacing, be sure to use parts of identical designation.*
- *Screws adjacent to ▼ mark on the product are used for disassembly.*

## 2.1 PACKING

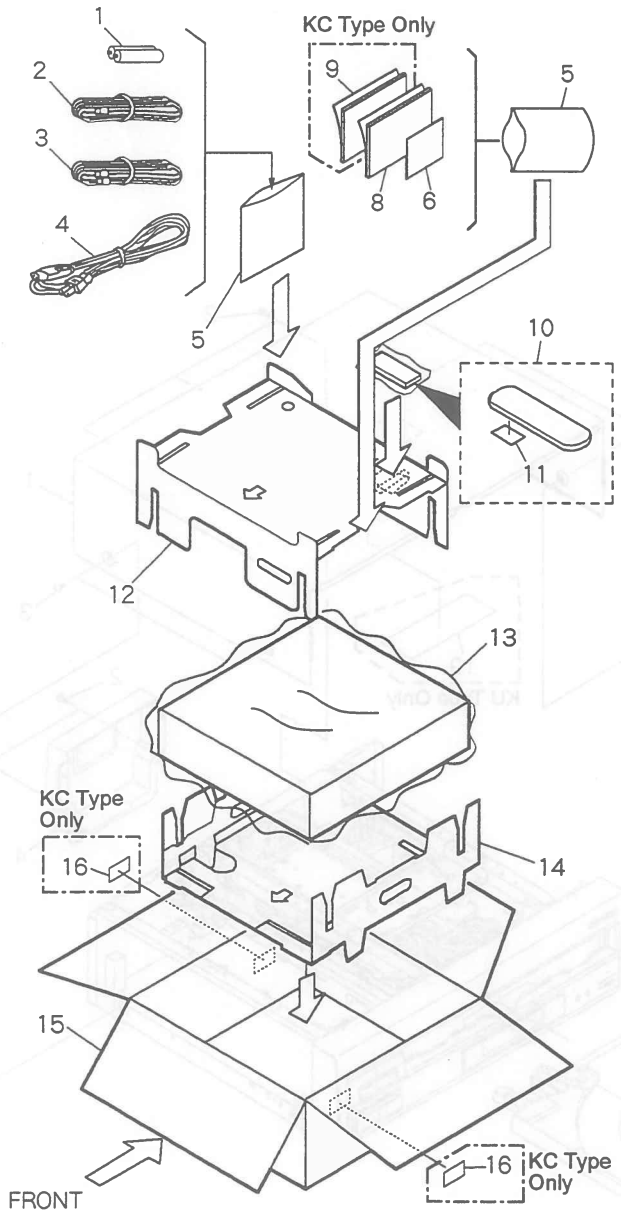


### (1) PARTS LIST

| Mark | No. | Description | Part No. |
|---|---|---|---|
| NSP | 1 | Dry Cell Battery (R6P, AA) | VEM-013 |
| | 2 | Video Cord | VDE1036 |
| | 3 | Audio Cord | VDE1033 |
| ⚠ | 4 | AC Power Cord | ADG1152 |
| | 5 | Polyethylene Bag 0.03 × 230 × 340 | Z21-038 |
| NSP | 6 | Warranty Card | See Contrast table (2) |
| | 7 | • • • • • | |
| | 8 | Operating Instructions (English) | VRB1179 |
| | 9 | Operating Instructions (French) | See Contrast table (2) |
| | 10 | Remote Control Unit (CU-CLD134) | VXX2400 |
| | 11 | Battery Cover | VNK2806 |
| | 12 | Protector (Upper) | VHB1042 |
| | 13 | Mirror Mat | DHL1006 |
| | 14 | Protector (Under) | VHB1041 |
| | 15 | Packing Case | VHG1651 |
| | 16 | KC Label | See Contrast table (2) |

### (2) CONTRAST TABLE

CLD-D406/KU and KC have the same construction except for the following:

| Mark | No. | Symbol & Description | Part No. | | Remarks |
|---|---|---|---|---|---|
| | | | CLD-D406/KU | CLD-D406/KC | |
| NSP | 6 | Warranty Card | ARY1044 | ARY1039 | |
| | 9 | Operating Instructions (French) | Not used | VRC1052 | |
| | 16 | KC Label | Not used | VRW1402 | |

## 2.2 EXTERIOR AND DISC TRAY SECTION

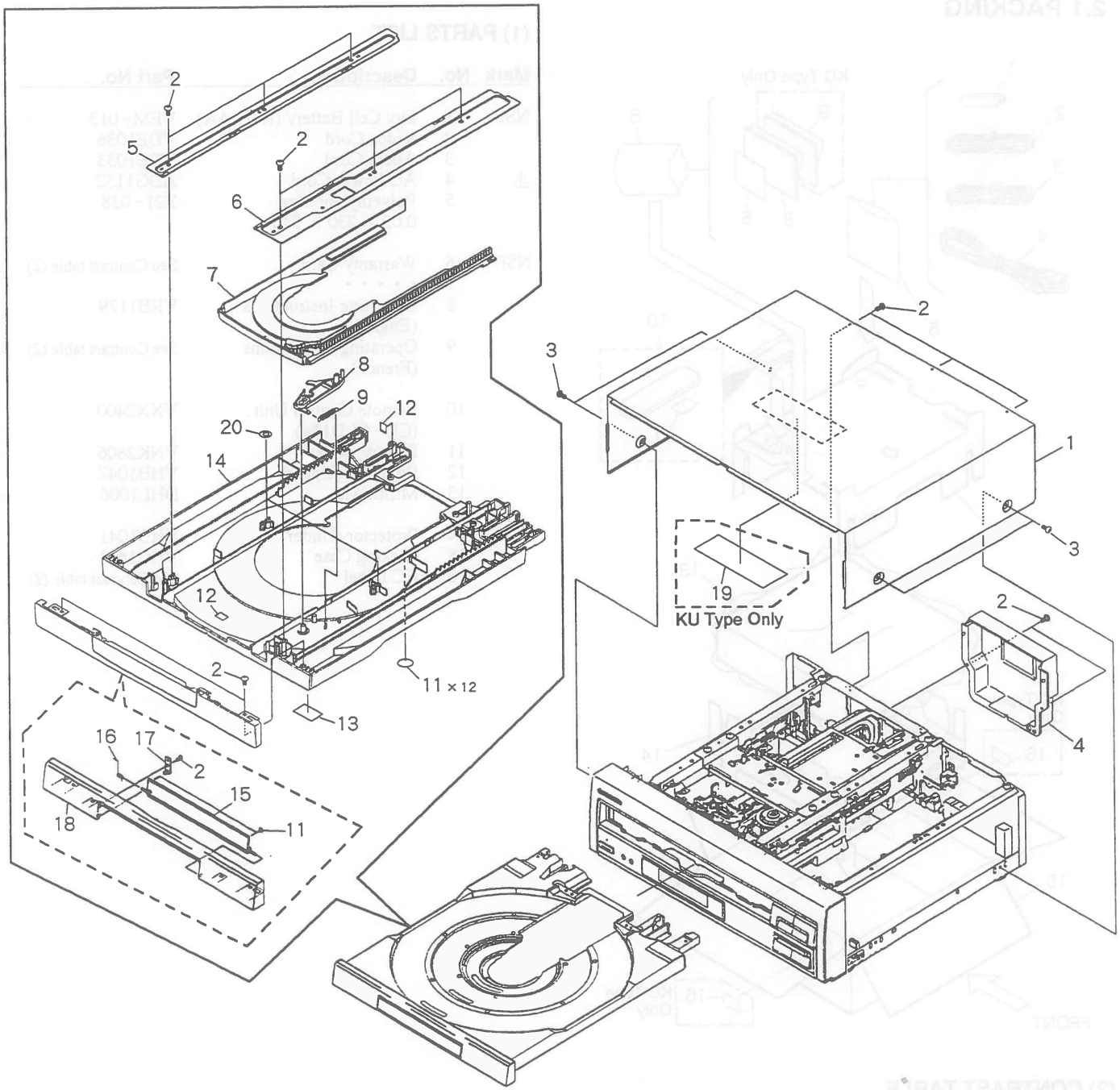

## (1) PARTS LIST

| Mark | No. | Description | Part No. | Mark | No. | Description | Part No. |
|---|---|---|---|---|---|---|---|
| | 1 | Bonnet S | VXX2252 | | 11 | Cushion | VEC1682 |
| | 2 | Screw | BBZ30P080FMC | | 12 | Damp Cushion | VEC1683 |
| | 3 | Screw | BCZ40P060FZK | NSP | 13 | Label | VRW1289 |
| | 4 | Rear Cover | VNK3950 | | 14 | LD Tray Assy | VXA2173 |
| | 5 | Guide Plate (R) | VNE1939 | | 15 | CD Door Assy | VXA2321 |
| | 6 | Guide Plate (L) | VNE1938 | | 16 | Door Spring | VBH1248 |
| | 7 | CD Tray | VNK3007 | | 17 | Door Holder | VNL1704 |
| | 8 | Look Plate | VNL1703 | | 18 | Tray Panel | VNK3929 |
| | 9 | Look Plate Spring | VBH1188 | | 19 | 65 Label | See Contrast table (2) |
| | 10 | • • • • • | | | 20 | Washer | VEC1254 |

## (2) CONTRAST TABLE

CLD-D406/KU and KC have the same construction except for the following:

| Mark | No. | Symbol & Description | Part No. | | Remarks |
|---|---|---|---|---|---|
| | | | CLD-D406/KU | CLD-D406/KC | |
| | 19 | 65 Label | ORW1069 | Not used | |

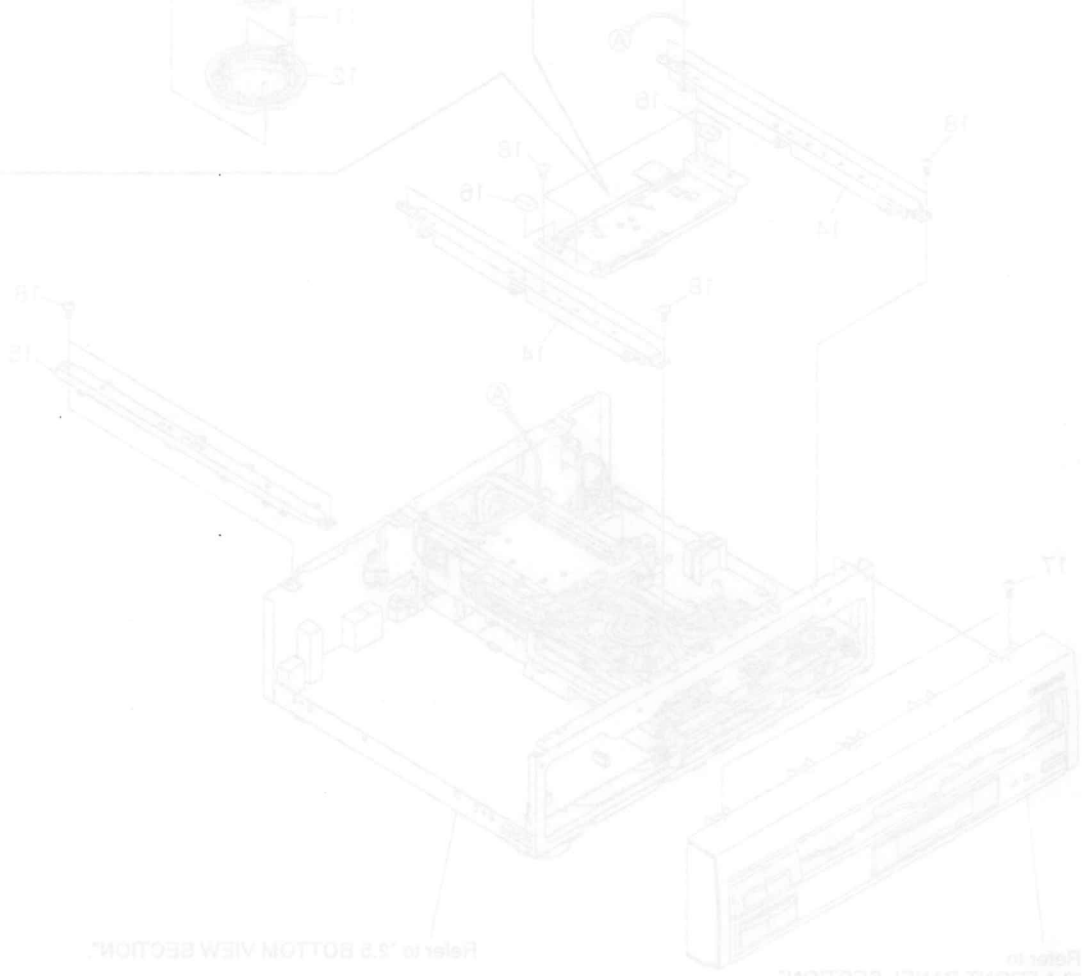

## 2.3 TOP VIEW SECTION

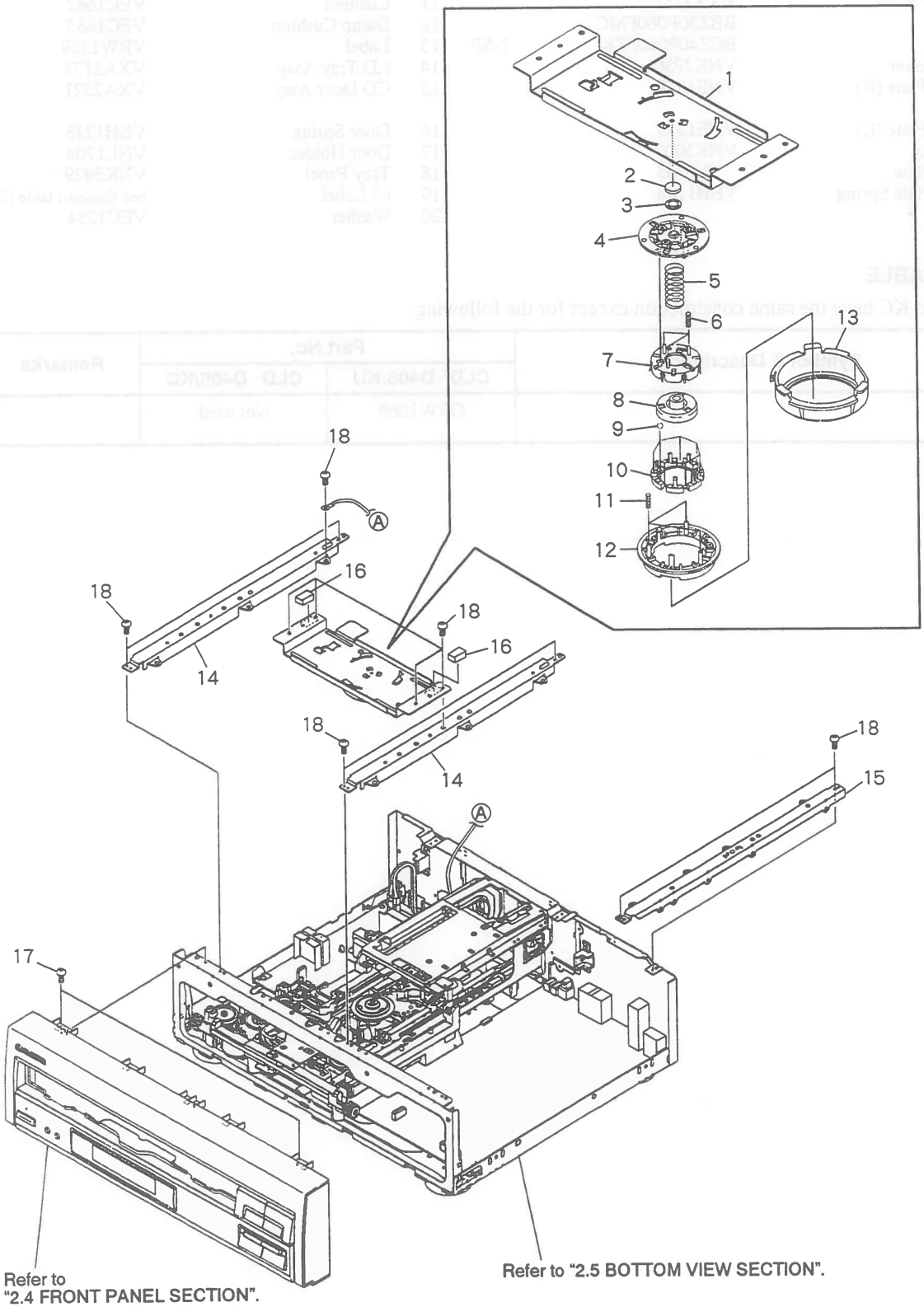

## Parts List

| Mark | No. | Description | Part No. |
|---|---|---|---|
| | 1 | Center Plate | VNE1971 |
| | 2 | Rubber Mat | VEB1114 |
| | 3 | Thrust Holder | VNL1663 |
| | 4 | Clamper Head | VNL1603 |
| | 5 | LD Spring | VBH1240 |
| | 6 | Cover Spring | VBH1234 |
| | 7 | Ball Cover | VNL1602 |
| | 8 | LD Hab | VNT1047 |
| | 9 | Ball | VNX1013 |
| | 10 | Ball Guide | VNL1616 |
| | 11 | Clamp Spring | VBH1239 |
| | 12 | Clamper | VNL1604 |
| | 13 | Clamper Holder | VNL1680 |
| | 14 | Center Angle | VNE1965 |
| NSP | 15 | PCB Holder | VNE1964 |
| NSP | 16 | Damp Cushion | VEC1602 |
| | 17 | Screw | IBZ30P080FMC |
| | 18 | Screw | BBZ30P080FMC |

## 2.4 FRONT PANEL SECTION

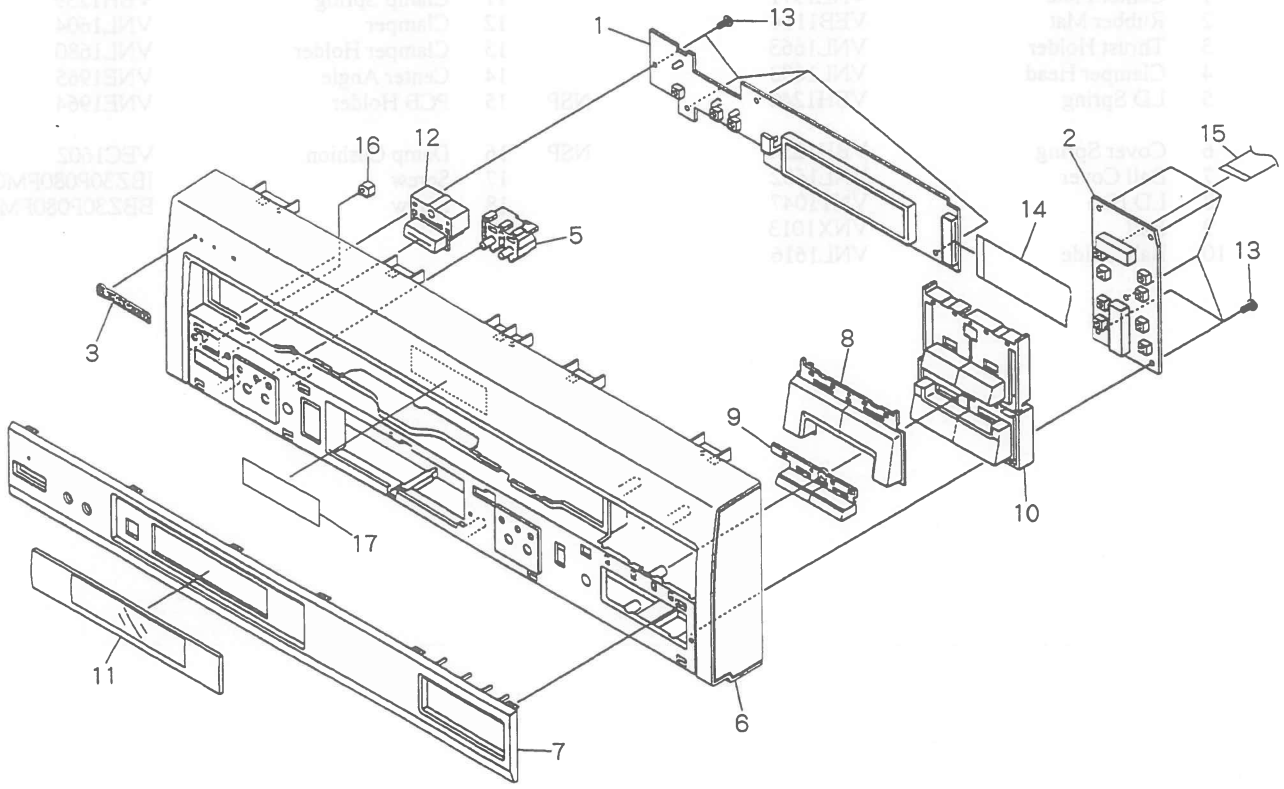


### Parts List

| Mark | No. | Description | Part No. |
|---|---|---|---|
| | 1 | FLKY Assy | VWG1810 |
| | 2 | KEYB Assy | VWG1811 |
| | 3 | Name Plate | PAM1608 |
| | 4 | • • • • • | |
| | 5 | L Key C | VNK3070 |
| | 6 | Front Panel | VNK3926 |
| | 7 | Sub Panel | VNK3931 |
| | 8 | Open Key | VNK3933 |
| | 9 | Skip Key | VNK3935 |
| | 10 | Main Key | VNK3937 |
| | 11 | FL Lens | VEC1903 |
| | 12 | PW Button | VNK2329 |
| | 13 | Screw | BBZ30P080FMC |
| | 14 | Flexible Cable (21P) (FLKY CN101 - KEYB CN201) | VDA1567 |
| | 15 | Flexible Cable (16P) (KEYB CN203 - MOTHER CN121) | VDA1566 |
| | 16 | LED Lens | PNW2019 |
| NSP | 17 | Getter Label | VRW1636 |

## 2.5 BOTTOM VIEW SECTION

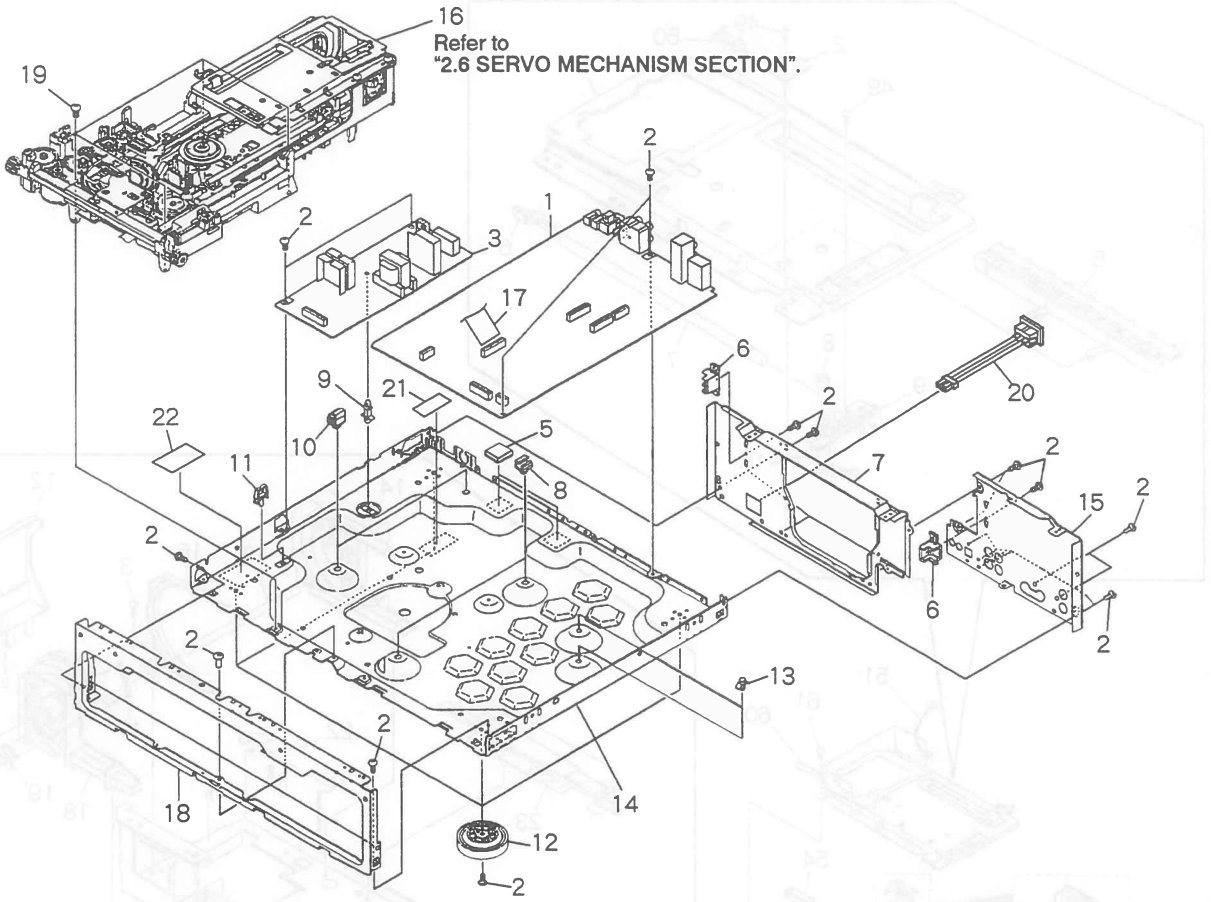


### Parts List

| Mark | No. | Description | Part No. |
|---|---|---|---|
| | 1 | MOTHER Assy | VWS1281 |
| | 2 | Screw | BBZ30P080FMC |
| ⚠ | 3 | POWER SUPPLY Assy | VWR1232 |
| | 4 | • • • • • | |
| NSP | 5 | Rubber Spacer | VEB1252 |
| | 6 | Tray Stopper | VNL1657 |
| | 7 | Rear Panel R | VNA1606 |
| NSP | 8 | P. Plate Holder | PNY-405 |
| NSP | 9 | PC Support | VEC-269 |
| | 10 | PCB Hinge | VEC1174 |
| NSP | 11 | Wire Clip (H) | VEC1181 |
| | 12 | Insulator | PNW1912 |
| | 13 | Card Spacer A | VEC1708 |
| NSP | 14 | Chassis | VNA1461 |
| | 15 | Rear Panel L | VNA1819 |
| NSP | 16 | Mechanism Assy | VWT1131 |
| | 17 | Flexible Cable (21P) (MOTHER CN102-POWER SUPPLY CN3) | VDA1465 |
| NSP | 18 | Panel Holder | VNA1835 |
| | 19 | Screw | BBZ30P100FMC |
| | 20 | AC Inlet Assy | VKP2126 |
| NSP | 21 | Fuse Caution Label (G) | VRW-548 |
| | 22 | Caution Label | VRW1486 |

## 2.6 SERVO MECHANISM SECTION

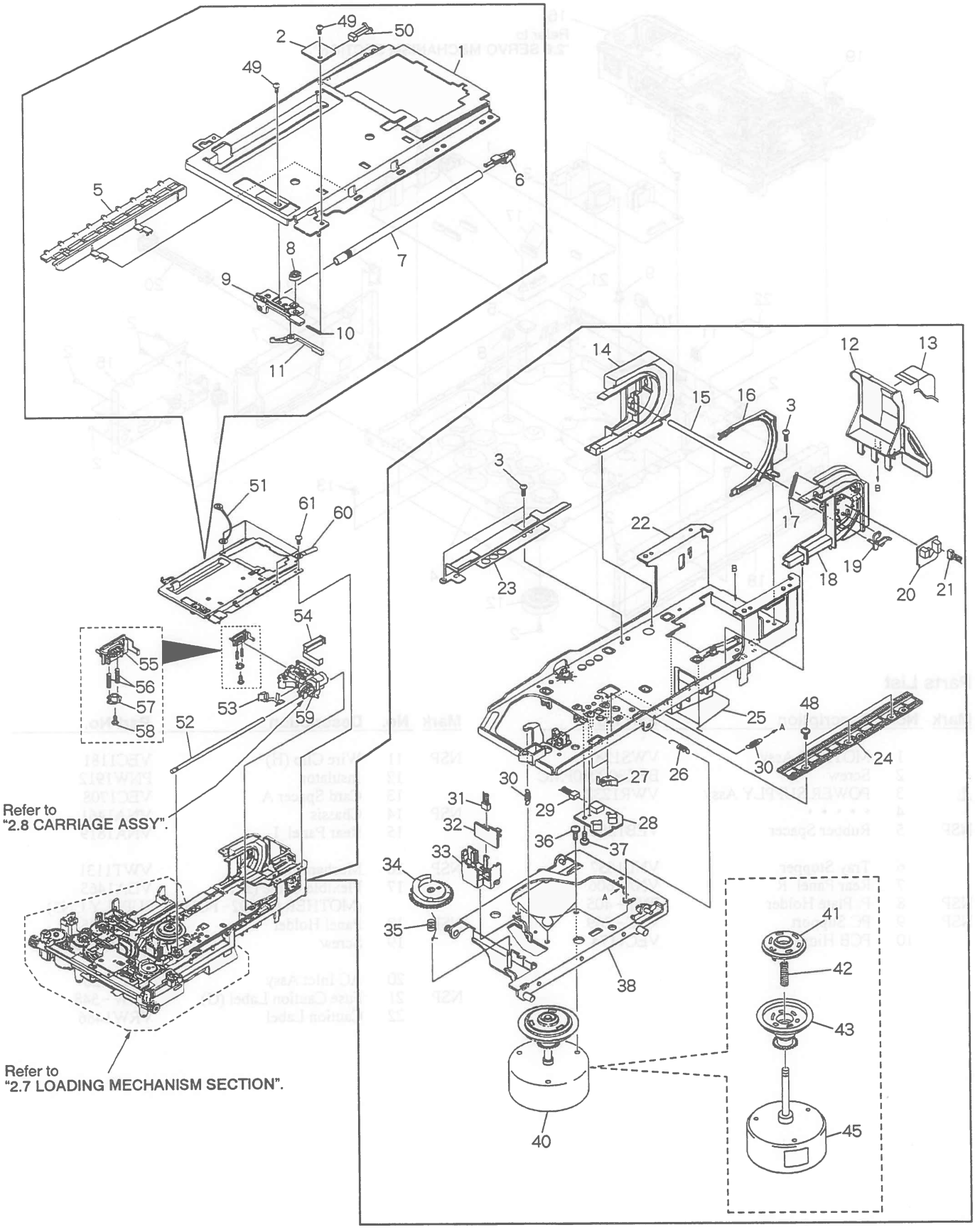

## Parts List

| Mark | No. | Description | Part No. |
|---|---|---|---|
| | 1 | Tilt Base (upper) | VNE1969 |
| NSP | 2 | BISB Assy | VWG1558 |
| | 3 | Screw | BBZ30P060FMC |
| | 4 | • • • • • | |
| | 5 | Rack (Upper) | VNL1679 |
| | 6 | Shaft Stay | VNL1671 |
| | 7 | Carriage Shaft (upper) | VLL1478 |
| | 8 | B Cam | VNL1673 |
| | 9 | Shaft Support | VNL1672 |
| | 10 | Support Spring | VBH1265 |
| | 11 | SW Lever (B) | VNL1678 |
| | 12 | Large hill | VNL1682 |
| | 13 | Flexible Cable (23P) | VDA1528 |
| | 14 | Turn Guide | VNL1701 |
| | 15 | FFC Style Shaft | VLL1474 |
| | 16 | Guide | VNL1674 |
| | 17 | Lever Spring | VBH1266 |
| | 18 | Turn Gear | VNL1702 |
| | 19 | SW Lever (T) | VNL1695 |
| NSP | 20 | TNSB Assy | VWG1557 |
| | 21 | Housing Assy (3P, Black) | VKP2059 |
| | 22 | Tilt Base (Under) | VNL1670 |
| | 23 | TAN Guide | VNE1973 |
| | 24 | CA Rack | VNL1647 |
| | 25 | FFC Style Spring | VBH1270 |
| | 26 | Thrust Spring | VBH1245 |
| | 27 | CA-SW Lever | VNL1644 |
| NSP | 28 | PKSB Assy | VWG1555 |
| | 29 | Housing Assy (3P, Blue) | VKP2045 |
| | 30 | Tilt Spring | VBH1263 |

| Mark | No. | Description | Part No. |
|---|---|---|---|
| | 31 | Housing Assy (3P, Yellow) | VKP2046 |
| NSP | 32 | FG Assy | VWG1556 |
| | 33 | FG Base | VNL1781 |
| | 34 | Tilt Cam | VNL1643 |
| | 35 | Tilt Cam Spring | VBH1243 |
| | 36 | Screw | PMA30P050FMC |
| | 37 | Screw | IBZ26P120FMC |
| | 38 | Motor Base | VNE1941 |
| | 39 | • • • • • | |
| | 40 | Spindle Motor Assy | VXA2271 |
| | 41 | PRC Hub | VNL1684 |
| | 42 | Centering Spring | VBH1269 |
| NSP | 43 | R Turn Table Assy | VXA2225 |
| | 44 | • • • • • | |
| NSP | 45 | Spindle Motor | VXM1057 |
| | 46 | • • • • • | |
| | 47 | • • • • • | |
| | 48 | Screw | IBZ26P060FMC |
| | 49 | Screw | BPZ20P040FZK |
| | 50 | Housing Assy (2P, Red) | VKP2060 |
| NSP | 51 | Earth Lead Unit | DE007VF0 |
| | 52 | Carriage Shaft (Under) | VLL1493 |
| | 53 | Body Guard | VNL1681 |
| | 54 | FFC Holder | VNL1706 |
| | 55 | CA Guide | VNL1668 |
| | 56 | TAN Spring (B) | VBH1264 |
| | 57 | TAN Lever (B) | VNL1669 |
| | 58 | Screw | PMZ20P060FZK |
| | 59 | Carriage Assy | VWT1110 |
| NSP | 60 | Cord Binder | ZCB-069Z |
| | 61 | Screw | BBZ30P080FMC |

## 2.7 LOADING MECHANISM SECTION

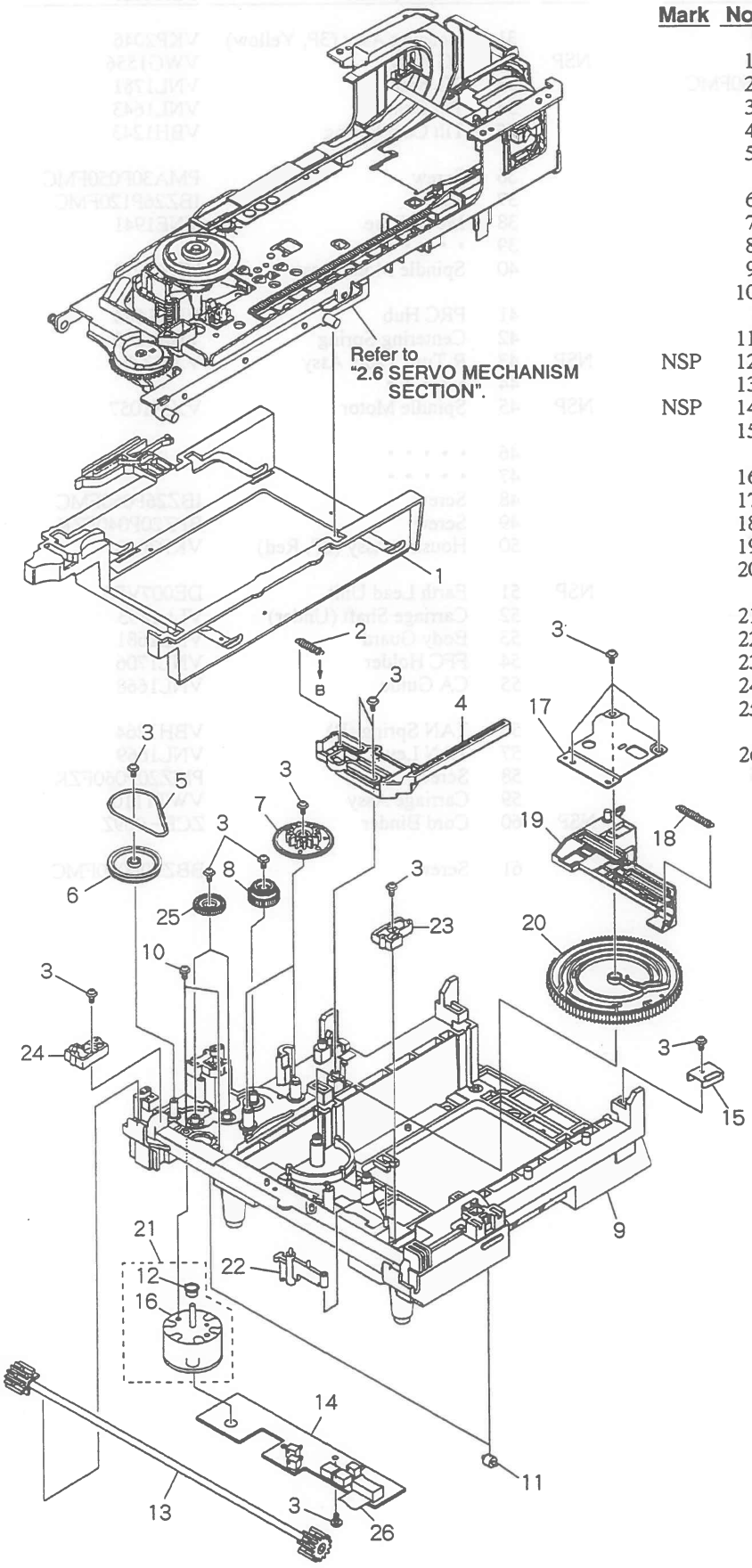


### Parts List

| Mark | No. | Description | Part No. |
|---|---|---|---|
| | 1 | Clamp Cam | VNL1633 |
| | 2 | CDP Spring | VBH1191 |
| | 3 | Screw | Z39-019 |
| | 4 | CD Plate | VNL1685 |
| | 5 | Rubber Belt | VEB1184 |
| | 6 | Gear Pulley | VNL1662 |
| | 7 | Twin Gear | VNL1626 |
| | 8 | Center Gear | VNL1660 |
| | 9 | Mechanism Base | VNK3239 |
| | 10 | Screw | BMZ26P040FMC |
| | 11 | Roller | VNL1042 |
| NSP | 12 | Motor Pulley | VNL1630 |
| | 13 | Synchro Gear Assy | VXA2105 |
| NSP | 14 | LMSB Assy | VWG1612 |
| | 15 | Cam Holder | VNE2032 |
| | 16 | Carriage Motor | VXM1033 |
| | 17 | Shaft Holder | VNE1942 |
| | 18 | CAS Spring | VBH1190 |
| | 19 | Cam Plate | VNL1631 |
| | 20 | Cam Gear | VNL1625 |
| | 21 | Loading Motor Assy | VXX2045 |
| | 22 | MB-SW Lever | VNL1664 |
| | 23 | Slider (R) | VNL1666 |
| | 24 | Slider (L) | VNL1665 |
| | 25 | Double Gear | VNL1661 |
| | 26 | Flexible Cable (12P) | VDA1485 |

## 2.8 CARRIAGE ASSY

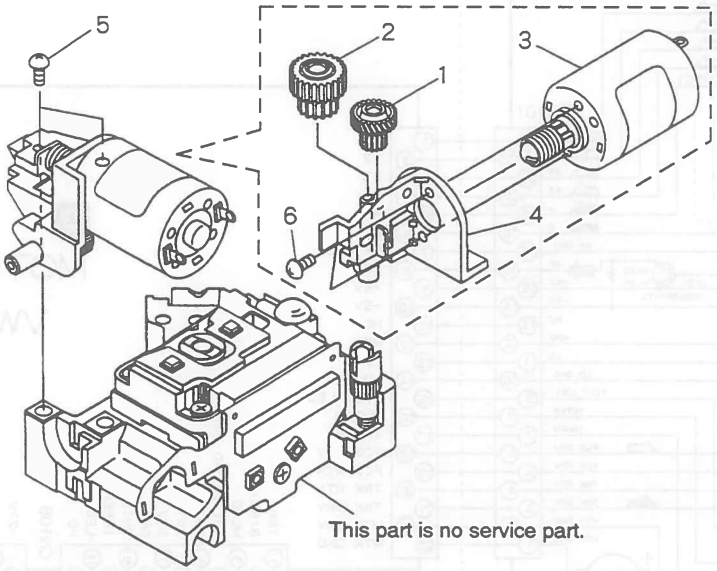


### Parts List

| Mark | No. | Description | Part No. |
|---|---|---|---|
| | 1 | CA Gear (A) | VNL1638 |
| | 2 | CA Gear (B) | VNL1639 |
| | 3 | Slider Motor Assy | VXX2082 |
| | 4 | M Holder | VNL1700 |
| | 5 | Screw | PBZ20P060FMC |
| | 6 | Screw | PMZ20P030FMC |

# 3. SCHEMATIC DIAGRAMS

## 3.1 OVERALL CONNECTIONS, PKSB, FG, TNSB, BISB, LMSB AND CARRIAGE ASSEMBLIES

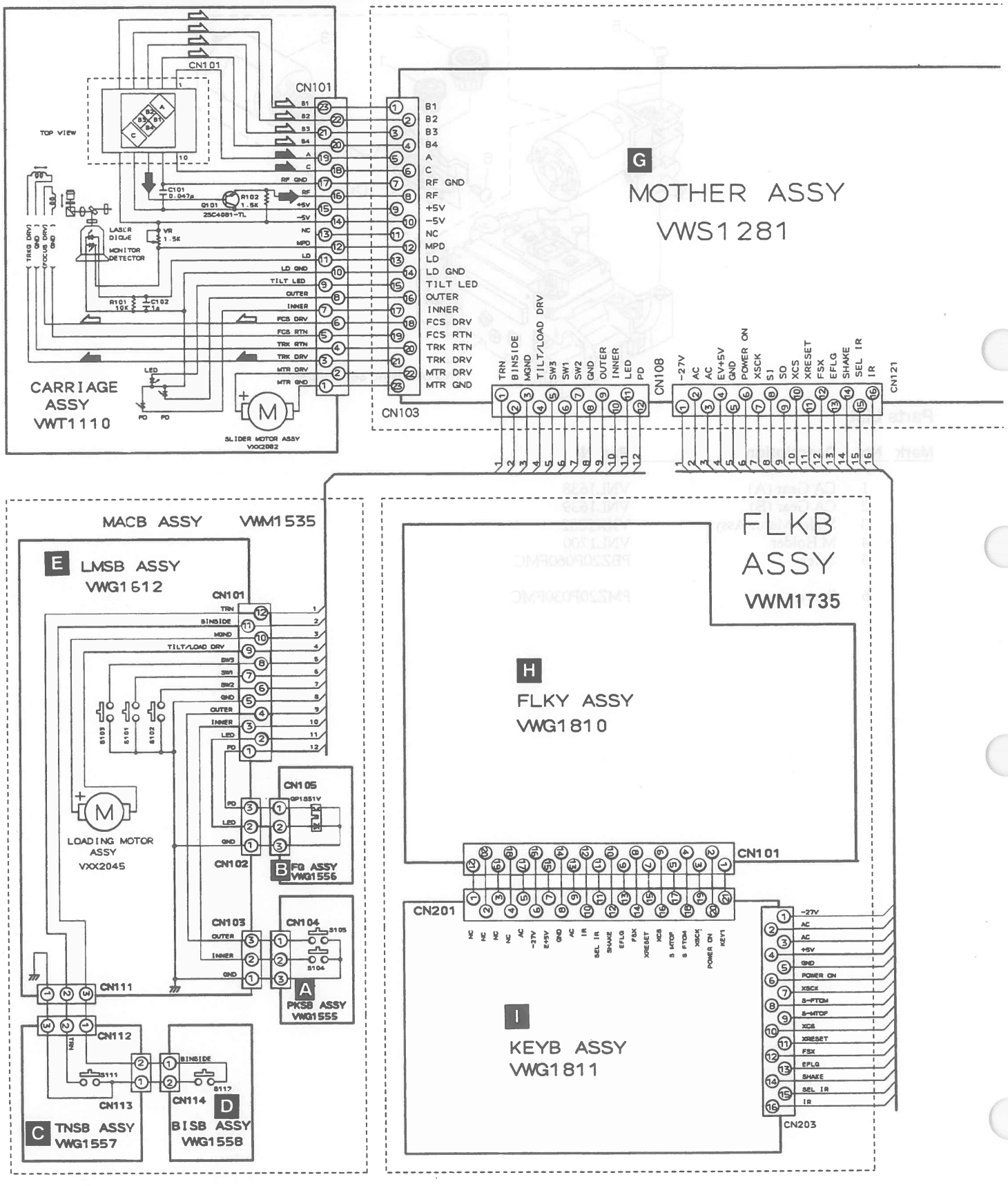

## NOTE FOR SCHEMATIC DIAGRAMS

(Type 4A)

1. **When ordering service parts, be sure to refer to "PARTS LIST of EXPLODED VIEWS" or "PCB PARTS LIST".**

2. **Since these are basic circuits, some parts of them or the values of some components may be changed for improvement.**

3. **RESISTORS:**
   Unit: k:kΩ, M:MΩ, or Ω unless otherwise noted.
   Rated power: 1/4W, 1/6W, 1/8W, 1/10W unless otherwise noted.
   Tolerance:(F):±1%, (G):±2%, (K):±10%, (M):±20% or ±5% unless otherwise noted.

4. **CAPACITORS:**
   Unit : p:pF or μF unless otherwise noted.
   Ratings : capacitor (μF) / voltage (V) unless otherwise noted.
   Rated voltage : 50V except for electrolytic capacitors.

5. **COILS:**
   Unit : m:mH or μH unless otherwise noted.

6. **VOLTAGE AND CURRENT:**
   ▭ or ←V :
   DC voltage (V) in PLAY mode unless otherwise noted.
   ⇦mA or ←mA :
   DC current in PLAY mode unless otherwise noted.
   Value in ( ) is DC current in STOP mode.

7. **OTHERS:**
   - ⊘ or ⊘ : Adjusting point.
   - ◀ : Measurement point.
   - The ⚠ mark found on some component parts indicates the importance of the safety factor of the parts. Therefore, when replacing, be sure to use parts of identical designation.

8. **SWITCHES** (Underline indicates switch position):

| FLKY ASSY | LMSB ASSY |
|---|---|
| S301 : DISPLAY OFF | S101:SW1 |
| S302 : QUICK TURN | S102:SW2 |
| S303 : POWER STANDBY/ON | S103:SW3 |
| **KEYB ASSY** | **PKSB ASSY** |
| S201 : STOP (■) | S104:INNER |
| S202 : ⏮ ◀◀ | S105:OUTER |
| S203 : A (DISC SIDE) | |
| S204 : CD OPEN/CLOSE (▲) | **TNSB ASSY** |
| S205 : LD OPEN/CLOSE (▲) | S111:TURN |
| S206 : B (DISC SIDE) | |
| S207 : ▶▶ ⏭ | **BISB ASSY** |
| S208 : PLAY/PAUSE (▶/ ❚❚) | S112:B INSIDE |

9. **View point of Large size SCH diagram :**

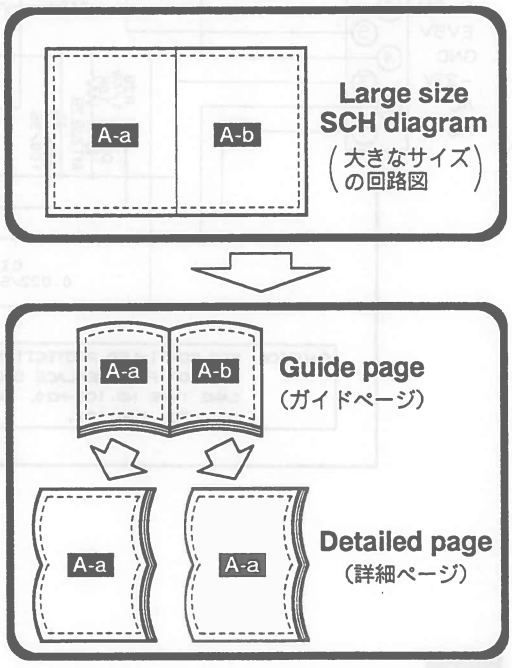


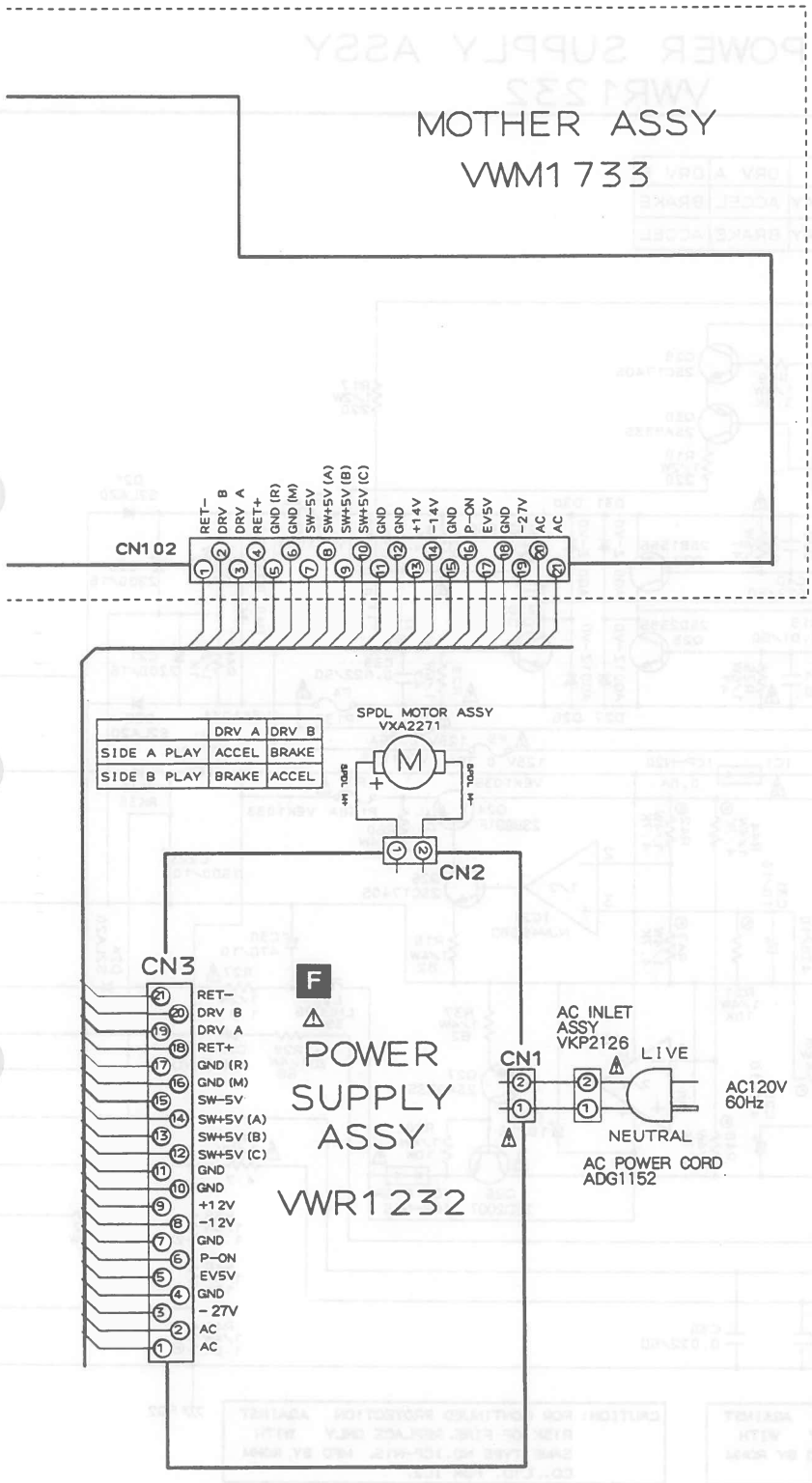


SIGNAL ROUTE
➡ : RF SIGNAL ROUTE
⇨ : FOCUS SERVO LOOP LINE
➡ : TRACKING SERVO LOOP LINE

## 3.2 POWER SUPPLY ASSY

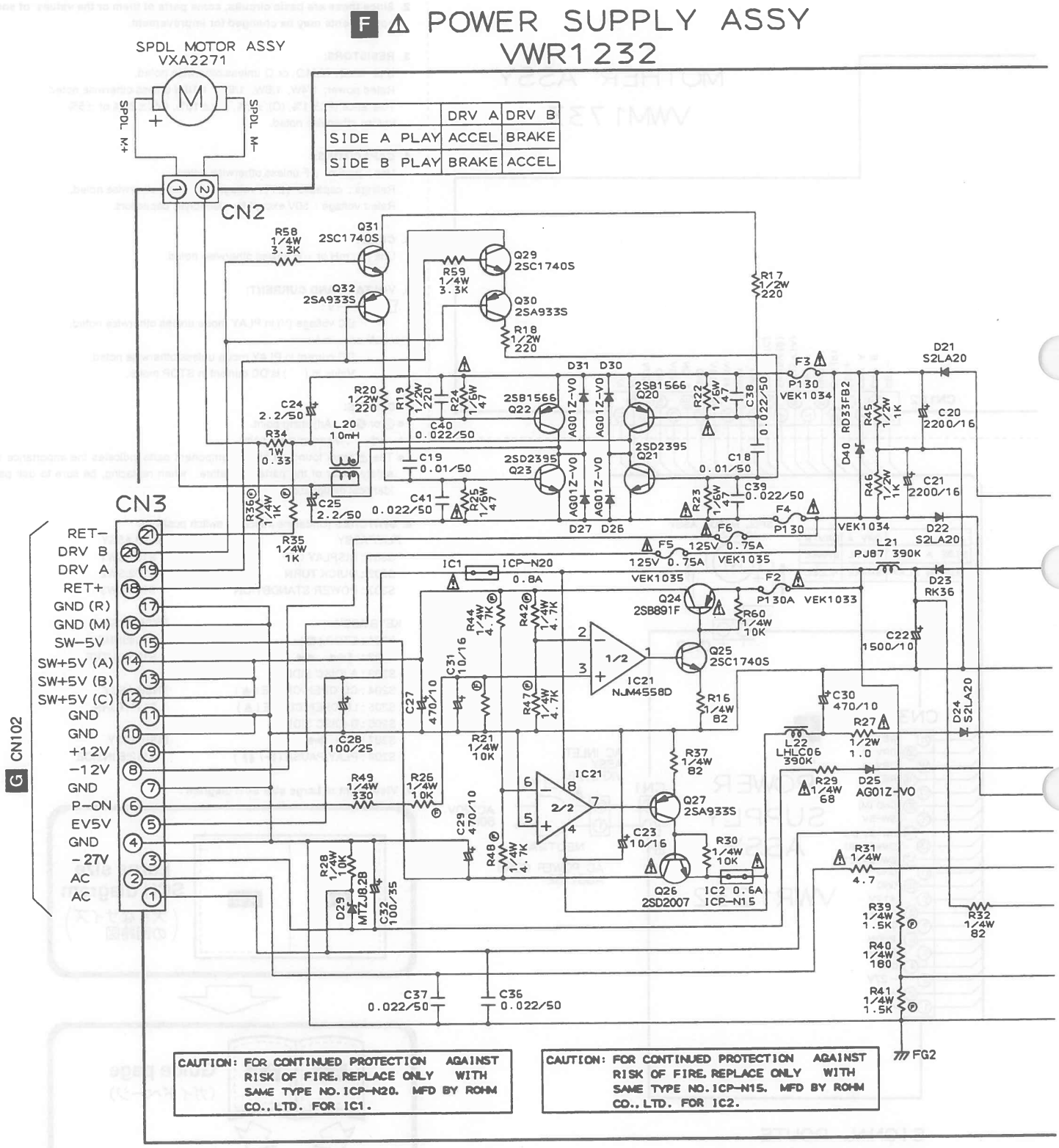

## 《NOTE OF SPARE PARTS IN POWER SUPPLY (SYPS) ASSY》

- In case of repairing, use the described parts only to prevent an accident.
- Please write the red ✓ mark on the board when the primary section of POWER SUPPLY (SYPS) Assy is repaired.
- Please take care to keep the space, not touching other parts when replacing the parts.

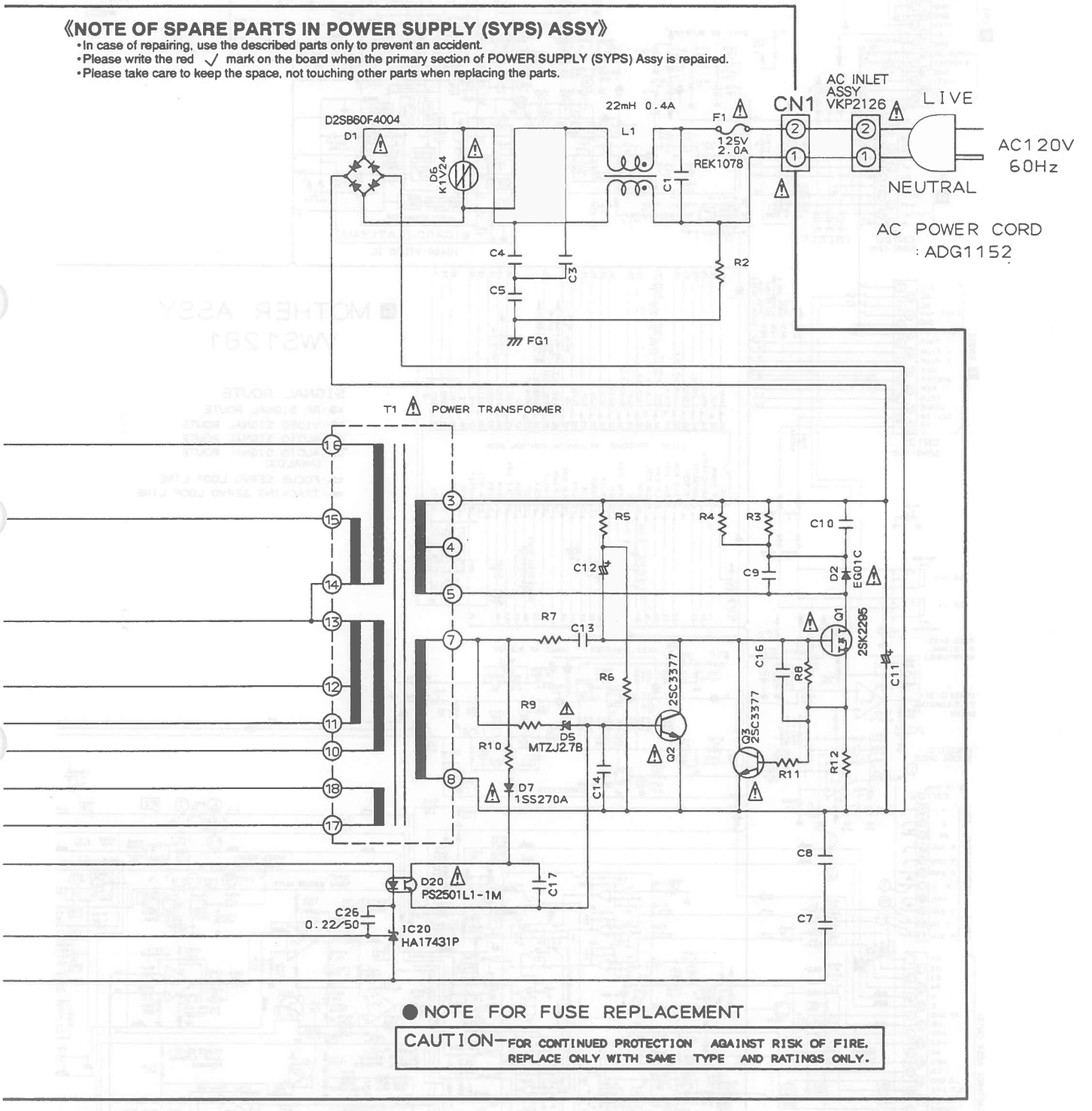

G-a

## 3.3 MOTHER ASSY

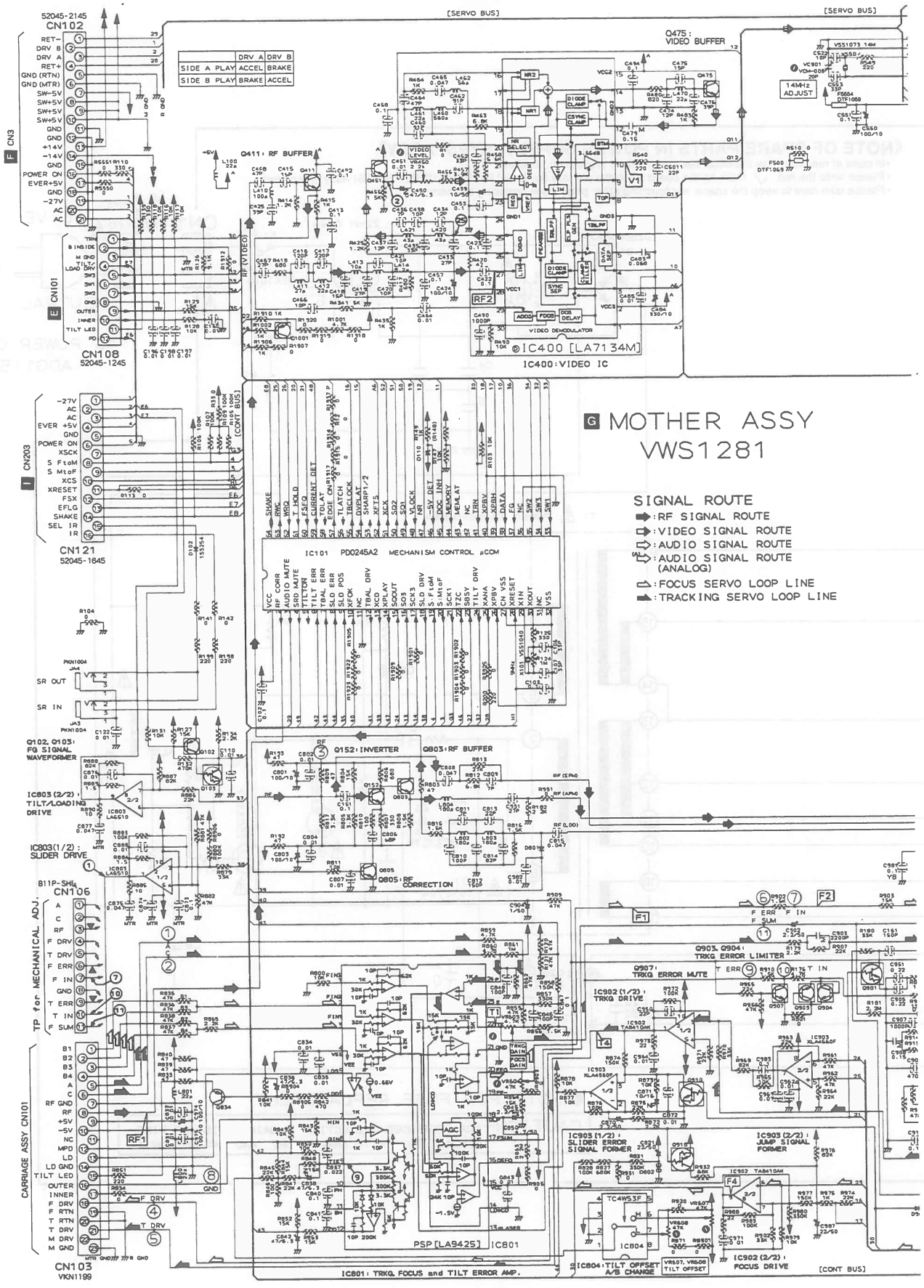

# G-b

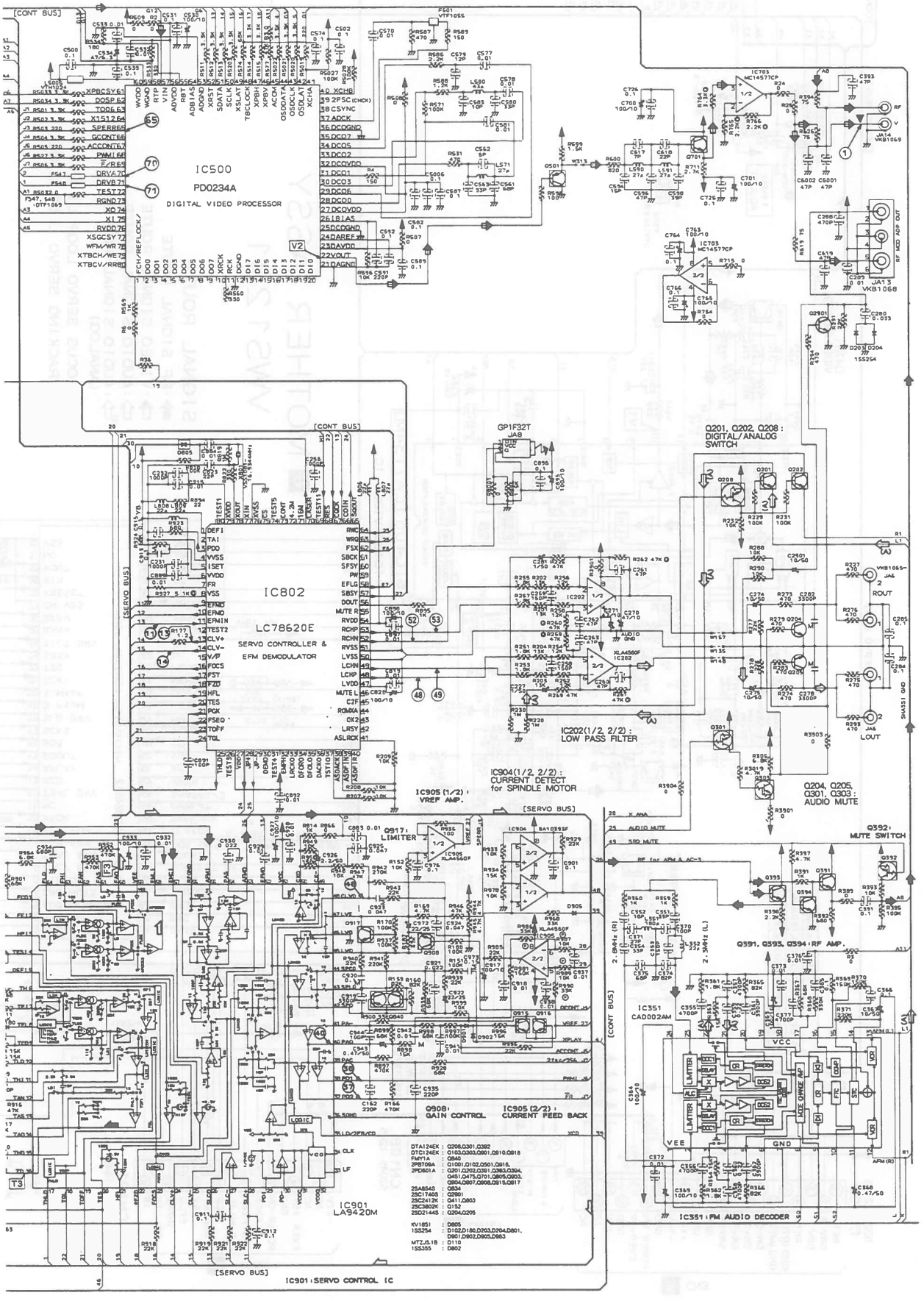
IC500
PD0234A
DIGITAL VIDEO PROCESSOR
IC802
LC78620E
SERVO CONTROLLER &
EFM DEMODULATOR
Q201, Q202, Q208 :
DIGITAL/ANALOG
SWITCH
IC202(1/2, 2/2) :
LOW PASS FILTER
IC904(1/2, 2/2) :
CURRENT DETECT
for SPINDLE MOTOR
IC905 (1/2) :
VREF AMP.
Q204, Q205,
Q301, Q303 :
AUDIO MUTE
Q392 :
MUTE SWITCH
Q391, Q393, Q394 : RF AMP.
Q917 :
LIMITER
Q908 :
GAIN CONTROL
IC905 (2/2) :
CURRENT FEED BACK
IC351
CAD002AM
IC351 : FM AUDIO DECODER
IC901
LA9420M
IC901 : SERVO CONTROL IC
[CONT BUS]
[SERVO BUS]

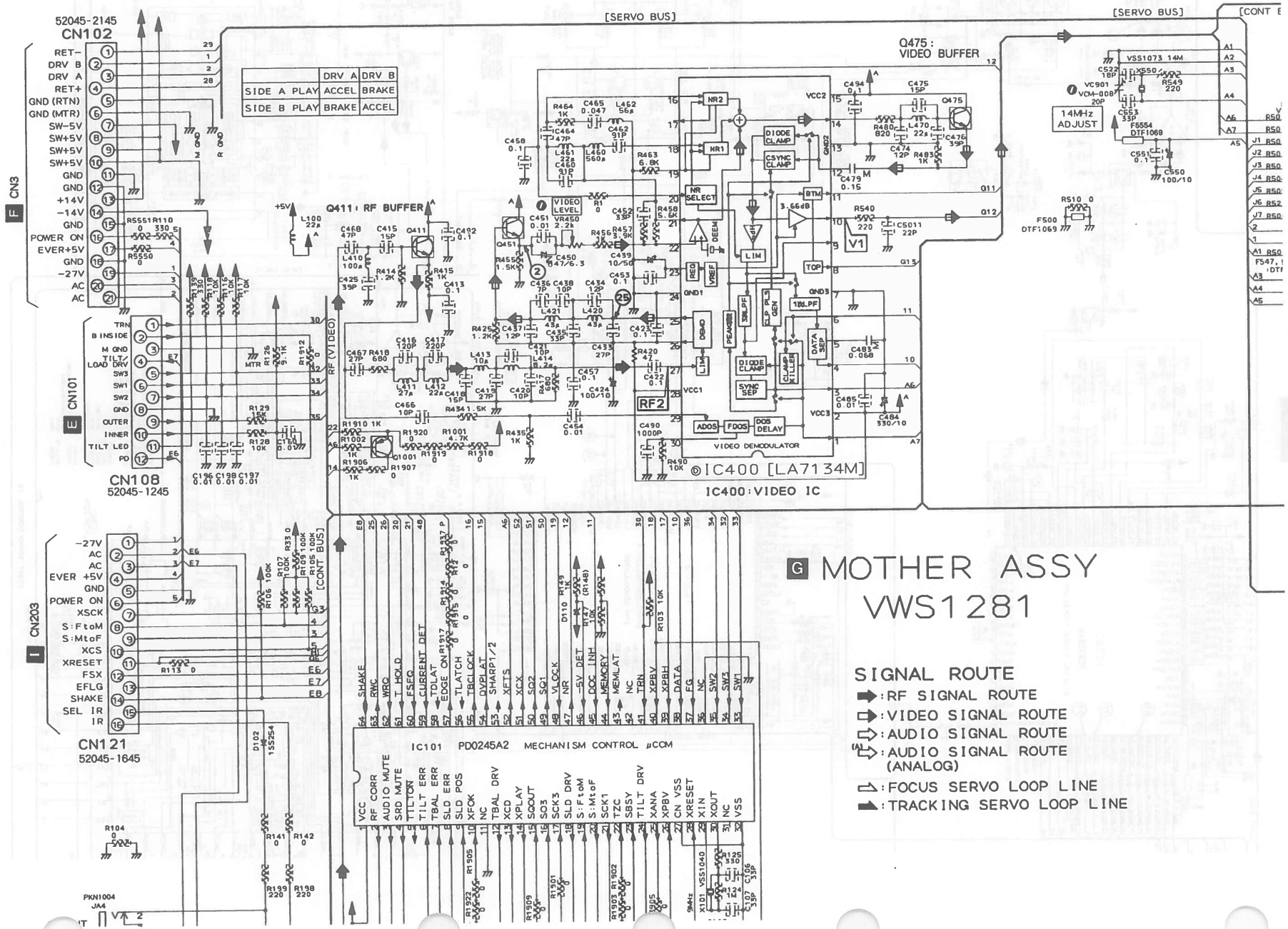


# G MOTHER ASSY VWS1281

## SIGNAL ROUTE

- ➡ : RF SIGNAL ROUTE
- ⇨ : VIDEO SIGNAL ROUTE
- ⇨ : AUDIO SIGNAL ROUTE
- ⇨ : AUDIO SIGNAL ROUTE (ANALOG)
- ⇨ : FOCUS SERVO LOOP LINE
- ➡ : TRACKING SERVO LOOP LINE

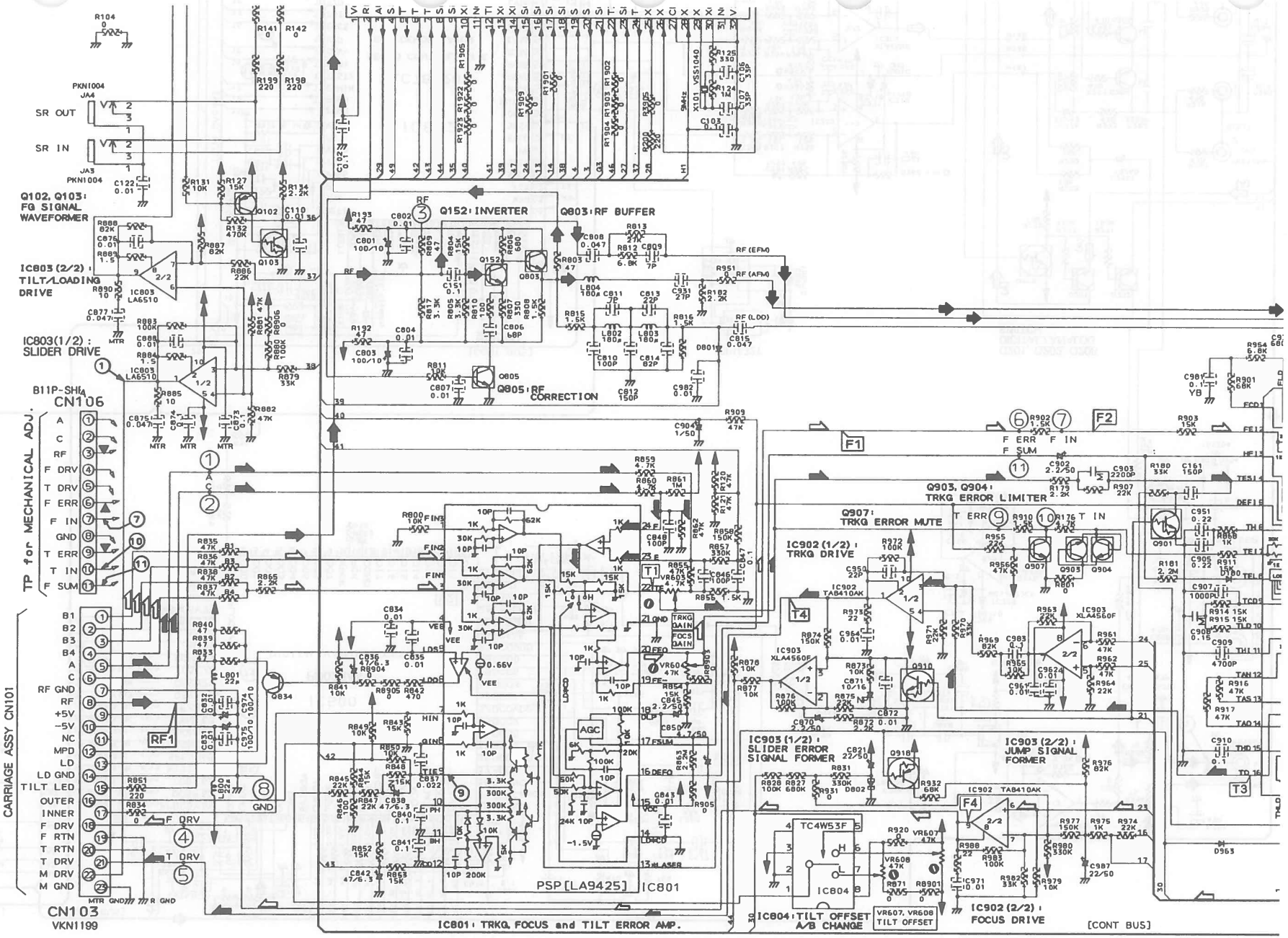
CN106
CN103
VKN1199
CARRIAGE ASSY CN101
TP for MECHANICAL ADJ.
SR OUT
SR IN
Q102, Q103: FG SIGNAL WAVEFORMER
IC803 (2/2): TILT/LOADING DRIVE
IC803(1/2): SLIDER DRIVE
Q152: INVERTER
Q803: RF BUFFER
Q805: RF CORRECTION
Q903, Q904: TRKG ERROR LIMITER
Q907: TRKG ERROR MUTE
IC902 (1/2): TRKG DRIVE
IC903 (1/2): SLIDER ERROR SIGNAL FORMER
IC903 (2/2): JUMP SIGNAL FORMER
IC902 (2/2): FOCUS DRIVE
IC804: TILT OFFSET A/B CHANGE
VR607, VR608 TILT OFFSET
PSP[LA9425] IC801
IC801: TRKG, FOCUS and TILT ERROR AMP.
[CONT BUS]

G-a G-b

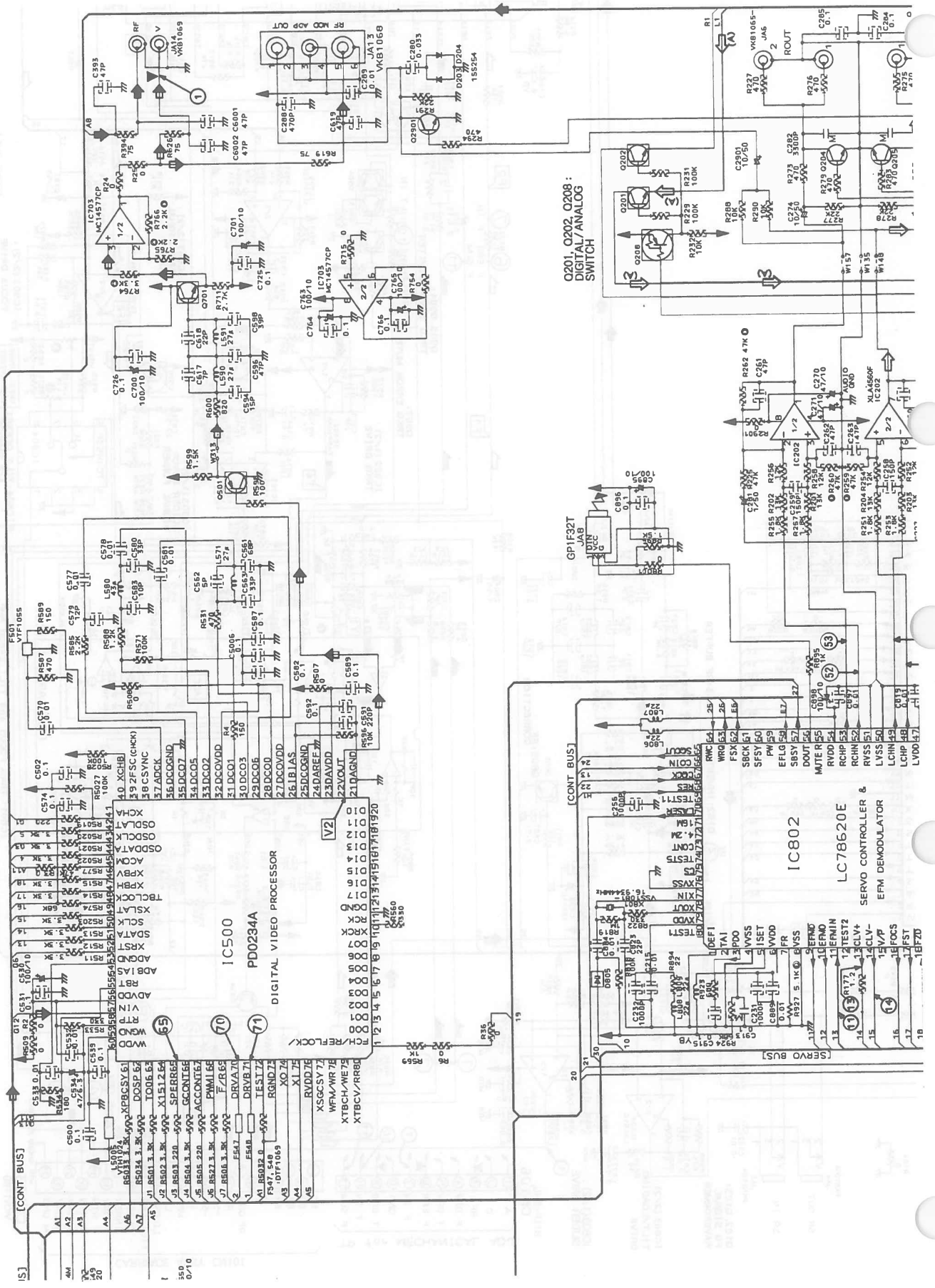
IC500
PD0234A
DIGITAL VIDEO PROCESSOR
IC802
LC78620E
SERVO CONTROLLER &
EFM DEMODULATOR
Q201, Q202, Q208 :
DIGITAL/ANALOG
SWITCH
[CONT BUS]
[SERVO BUS]

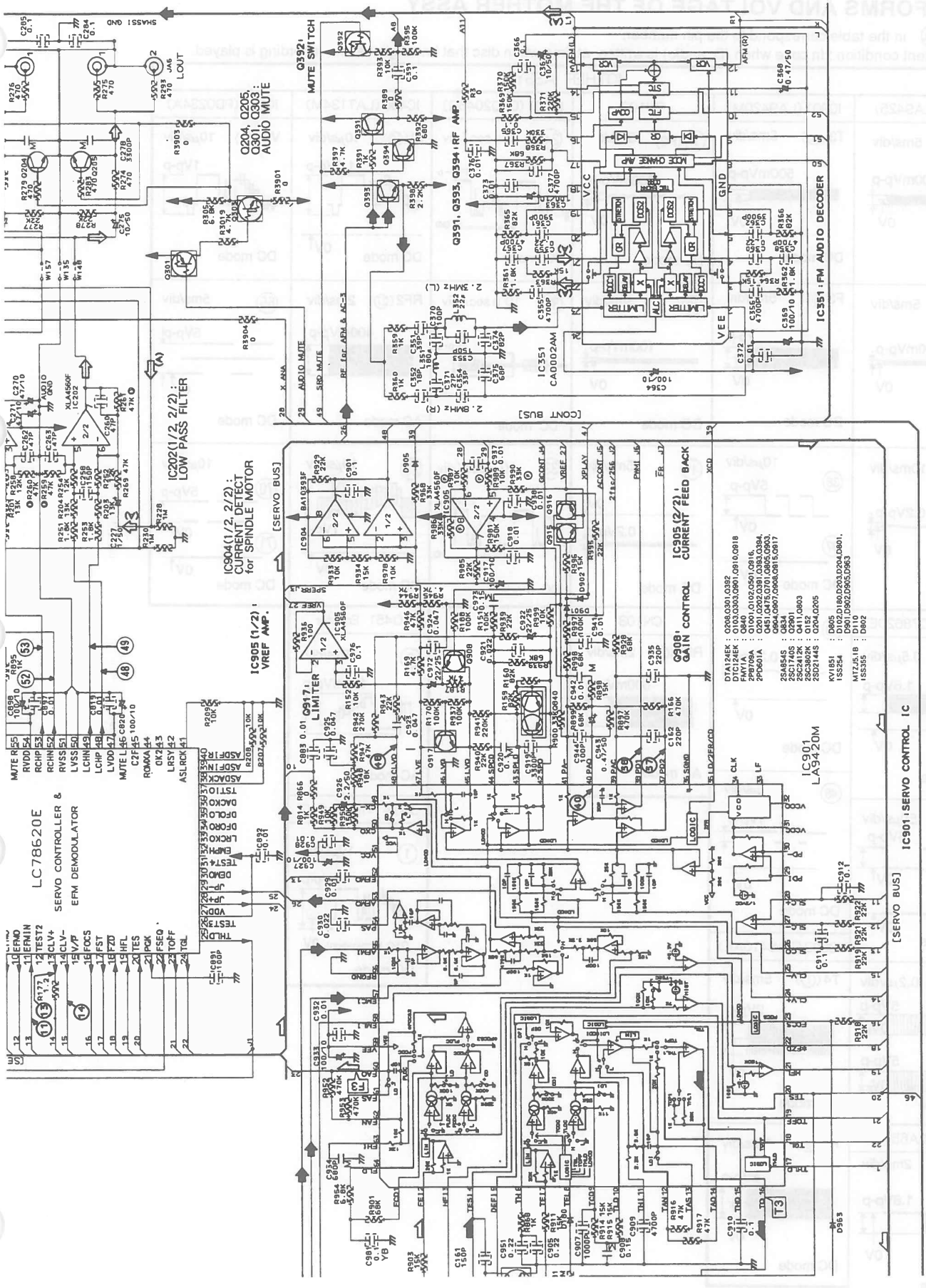
LC78620E
SERVO CONTROLLER &
EFM DEMODULATOR
IC202(1/2, 2/2) :
LOW PASS FILTER
IC904(1/2, 2/2) :
CURRENT DETECT
for SPINDLE MOTOR
IC905 (1/2) :
VREF AMP.
Q917 :
LIMITER
IC905 (2/2) :
CURRENT FEED BACK
Q908 :
GAIN CONTROL
IC901 : SERVO CONTROL IC
IC901
LA9420M
IC351 : FM AUDIO DECODER
IC351
CA0002AM
Q391, Q393, Q394 : RF AMP.
Q392 :
MUTE SWITCH
Q204, Q205,
Q301, Q303 :
AUDIO MUTE
[SERVO BUS]
[CONT BUS]

## WAVEFORMS AND VOLTAGE OF THE MOTHER ASSY

Note : (No.) in the table correspond to the pin number.
Measurement condition : In case when (D. audio) is written, at time when disc that has digital audio recording is played.

### MOTHER ASSY

#### IC801 (LA9425)

T1(22) 5ms/div
200mVp-p
0V
DC mode

F1(20) 5ms/div
100mVp-p
0V
DC mode

(9) 10ms/div
0.2Vp-p
0V
DC mode

#### IC802 (LC78620E)

(11) 0.5μs/div
1.6Vp-p
0V
DC mode

50μs/div
(13) 5Vp-p
0V
(14) 0V
DC mode

0.2μs/div
(48),(53) 5Vp-p
0V
(49),(52) 5Vp-p
0V
DC mode

#### IC803 (LA6510)

(1) 2ms/div
1.8Vp-p
0V
DC mode

#### IC901 (LA9420M)

T3(16) 5ms/div
500mVp-p
0V
DC mode

F3(60) 5ms/div
1Vp-p
0V
DC mode

10μs/div
(38) 5Vp-p
0V
(37) 0V
DC mode

(40) 10ms/div
0.3Vp-p
0V
DC mode

(48) 50μs/div
1Vp-p
0V
DC mode

#### IC902 (TA8410AK)

T4(1) 5ms/div
2Vp-p
0V
DC mode

F4(9) 5ms/div
5Vp-p
0V
DC mode

#### CN106

(7)(F2) 5ms/div
200mVp-p
0V
DC mode

(10) 5ms/div
100mVp-p
0V
DC mode

(11) 5ms/div
0V
0.2Vp-p
DC mode

#### CN103

RF1(8) 2ms/div
600mVp-p
AC mode

#### IC701 (CXD2046Q)

(24) 10 μsec/div
2.2Vp-p
GND
DC mode

(36) 10 μsec/div
1Vp-p
GND
DC mode

(33) 10 μsec/div
2.2Vp-p
GND
DC mode

#### IC400 (LA7134M)

V1(10) 10μs/div
1.6Vp-p
0V
DC mode

RF2(27) 2ms/div
400mVp-p
AC mode

(25) 10μs/div
1Vp-p
0V
DC mode

#### Q451 Emitter

(2) 10μs/div
400mVp-p
AC mode

#### JA14 VIDEO OUT

(1) 10μs/div
1Vp-p
(75Ω termination) 0V
DC mode

#### IC500 (PD0234A)

V2(22) 10μs/div
1Vp-p
DC mode

(65) 5ms/div
5Vp-p
0V
AC mode
DC mode

10μs/div
(70) 5Vp-p
0V
(71) 0V
DC mode

## 3.4 FLKY AND KEYB ASSEMBLIES

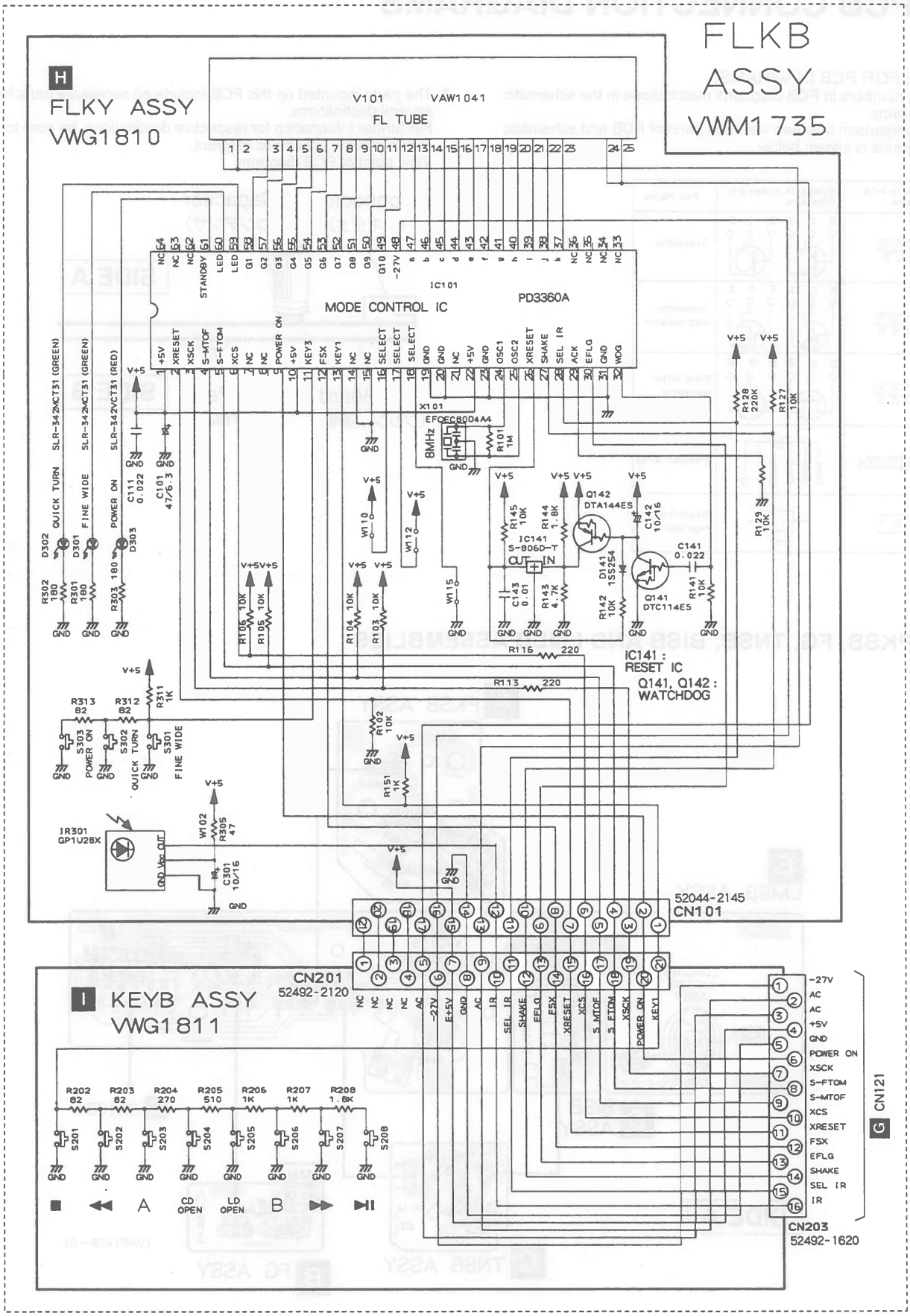

# 4. PCB CONNECTION DIAGRAMS

NOTE FOR PCB DIAGRAMS:
1. Part numbers in PCB diagrams match those in the schematic diagrams.
2. A comparison between the main parts of PCB and schematic diagrams is shown below.

| Symbol in PCB Diagrams | Symbol in Schematic Diagrams | Part Name |
|---|---|---|
| B C E | B C E B C E | Transistor |
| B C E | B C E B C E | Transistor with resistor |
| D G S | D G S D G S | Field effect transistor |
| | | Resistor array |
| | | 3-terminal regulator |

3. The parts mounted on this PCB include all necessary parts for several destinations.
   For further information for respective destinations, be sure to check with the schematic diagram.
4. View point of PCB diagrams

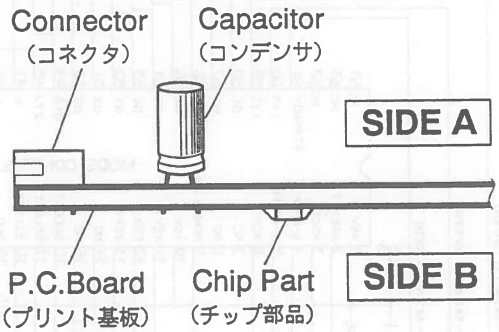


## 4.1 PKSB, FG, TNSB, BISB AND LMSB ASSEMBLIES

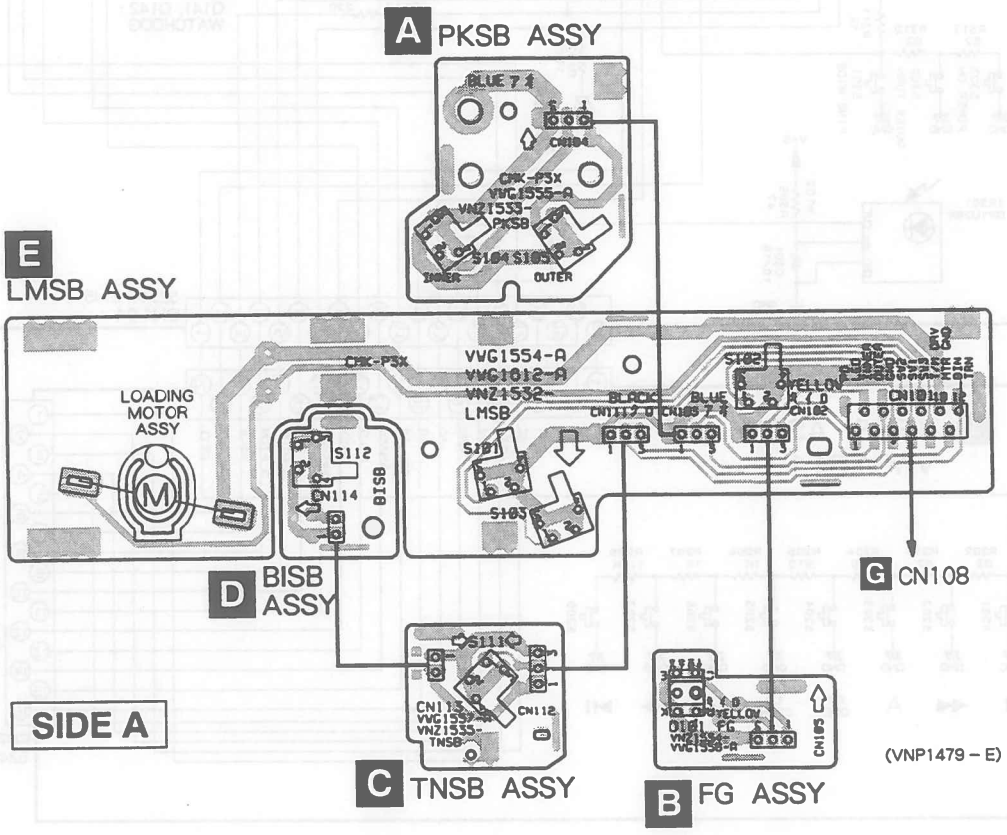

## 4.2 POWER SUPPLY ASSY

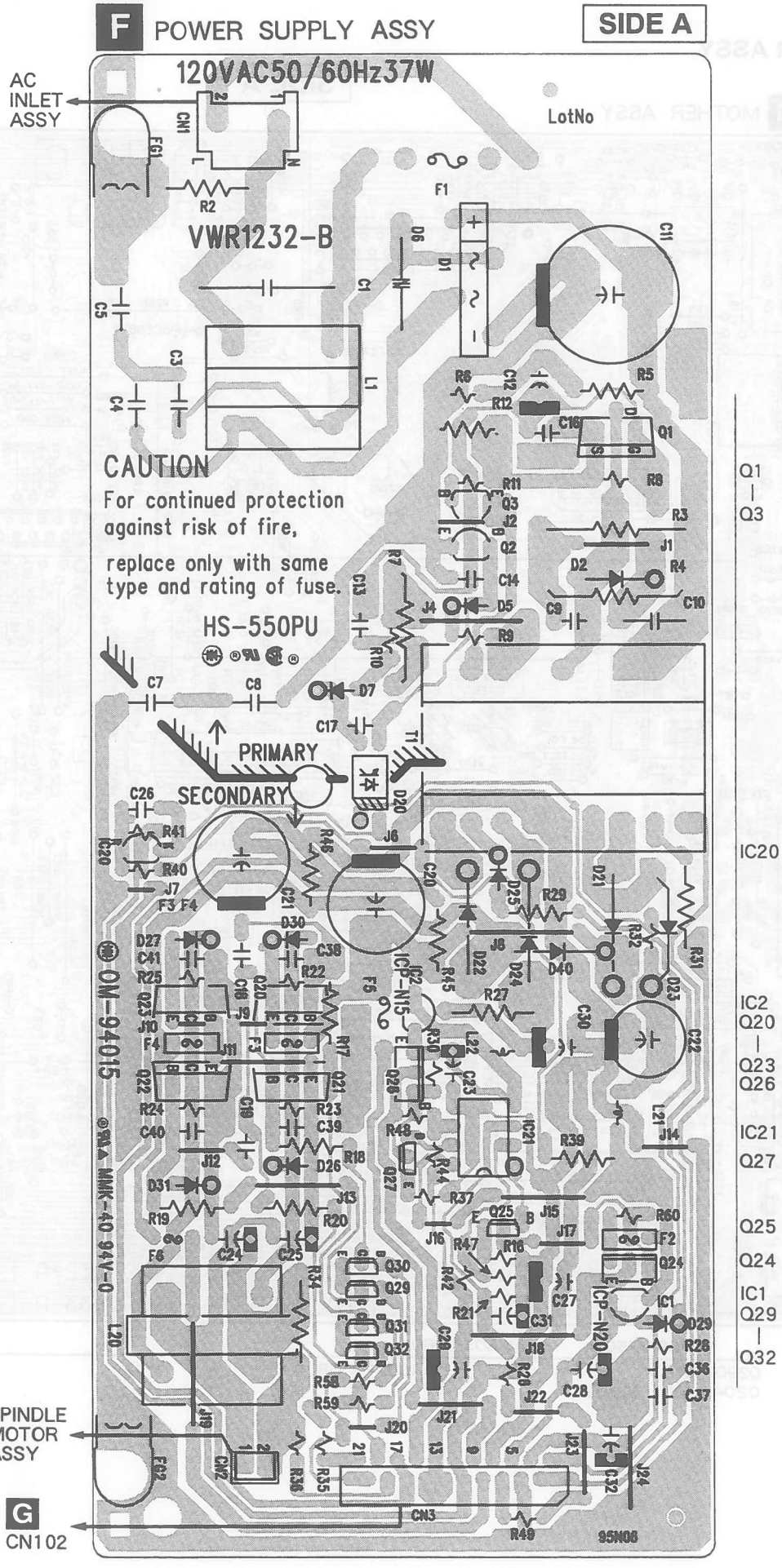

## 4.3 MOTHER ASSY

**SIDE A**

**G** MOTHER ASSY

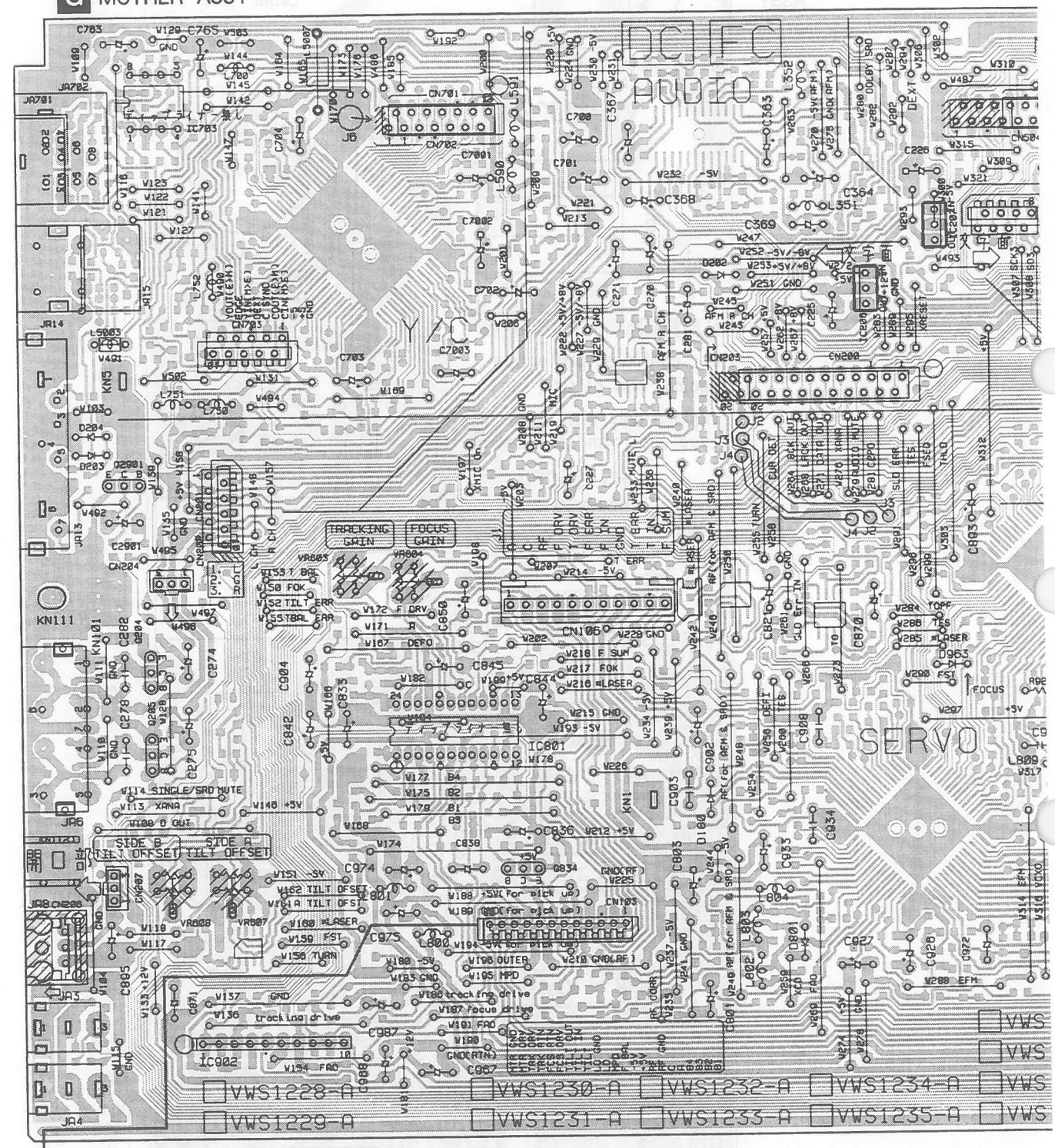


CARRIAGE ASSY CN101

VR608 VR607 VR603 VR604
Q2901 IC703 IC801 Q834 IC206 IC207
Q204 Q205 IC902

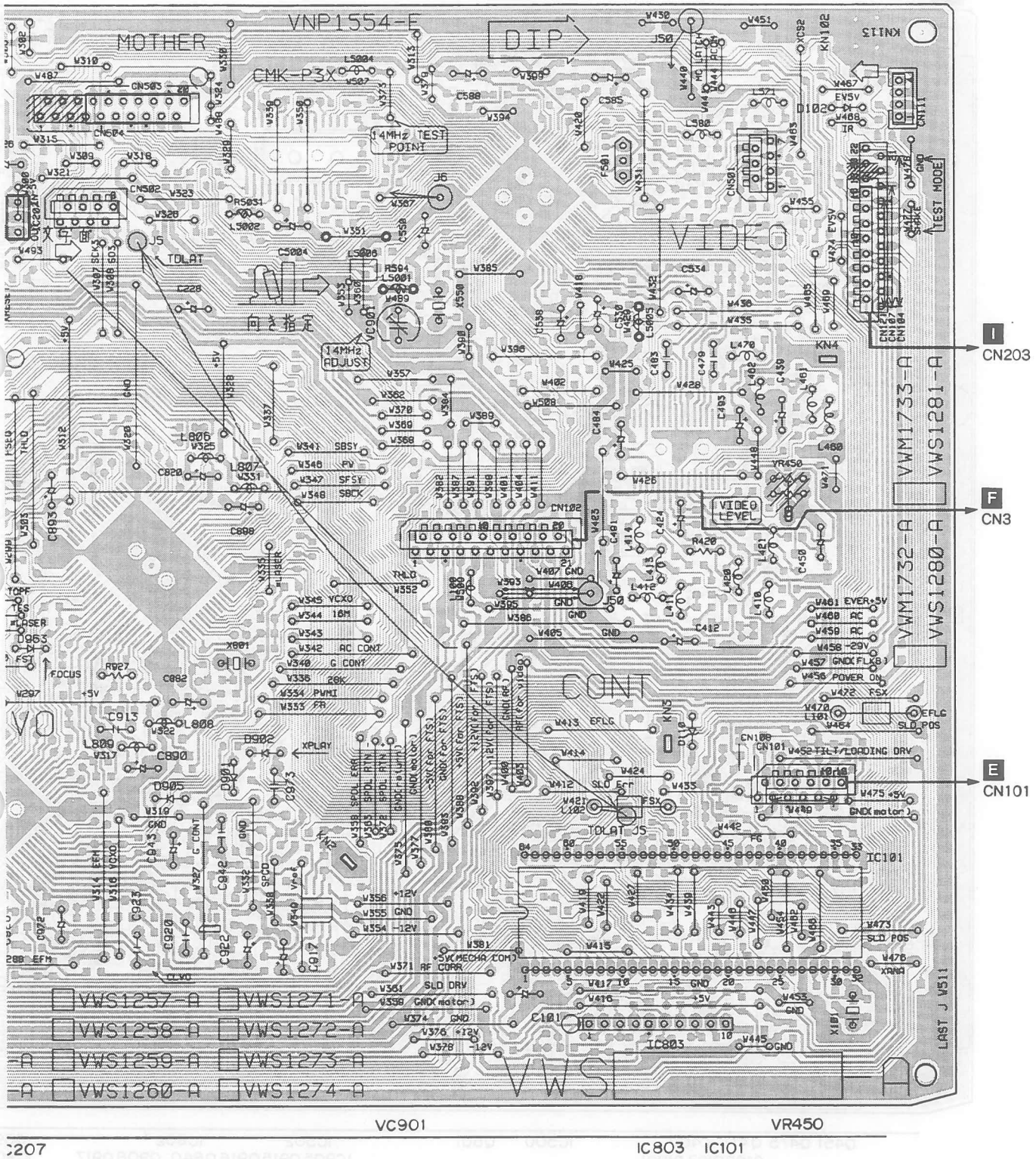
VNP1554-F
MOTHER
CMK-P3X
DIP
VIDEO
CONT
VWM1733-A
VWS1281-A
VWM1732-A
VWS1280-A
VWS1257-A
VWS1271-A
VWS1258-A
VWS1272-A
VWS1259-A
VWS1273-A
VWS1260-A
VWS1274-A
VWS
14MHz ADJUST
14MHz TEST POINT
VIDEO LEVEL
TEST MODE
I
CN203
F
CN3
E
CN101
VC901
VR450
IC803
IC101
C207

## SIDE B

### G MOTHER ASSY

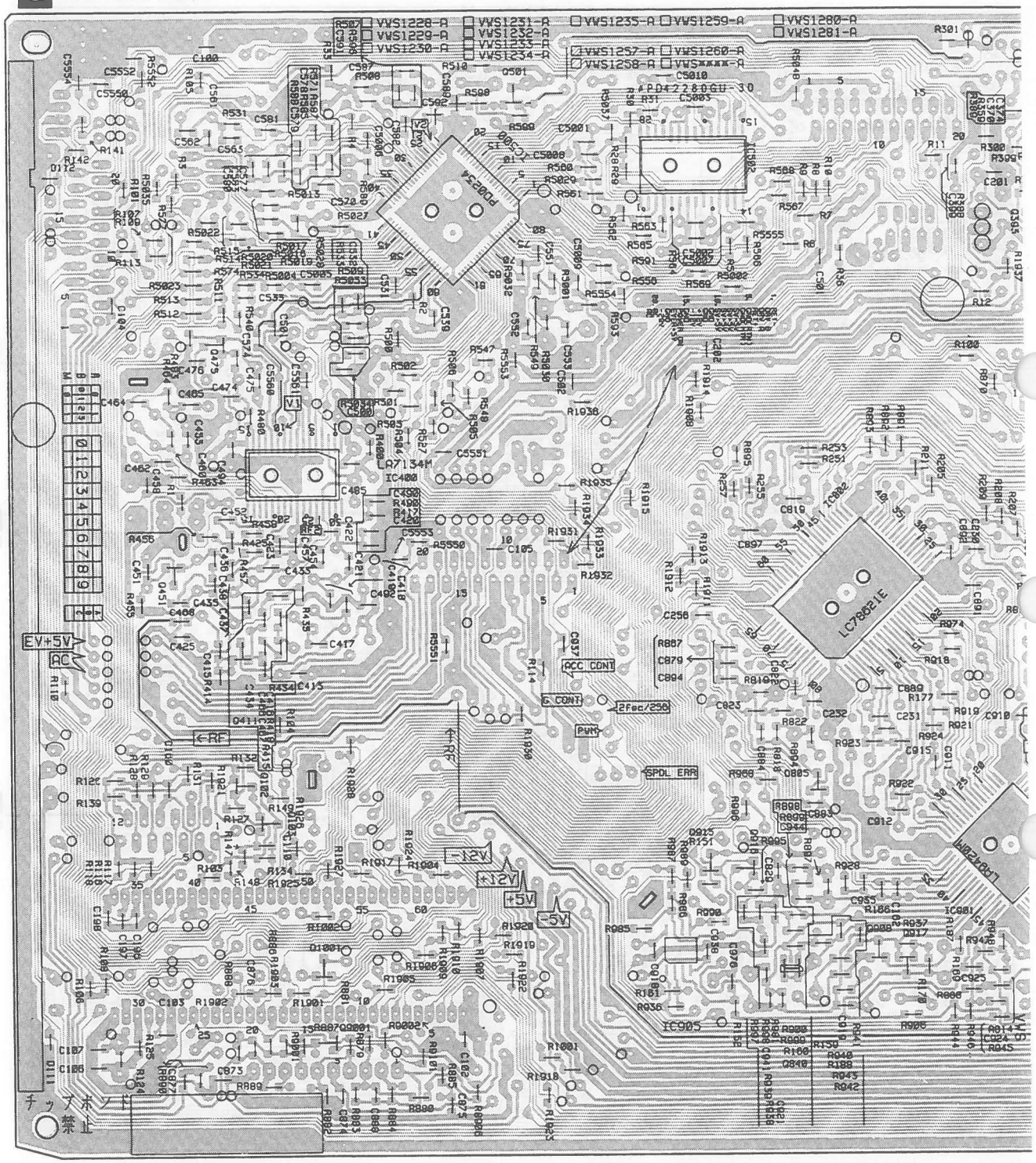

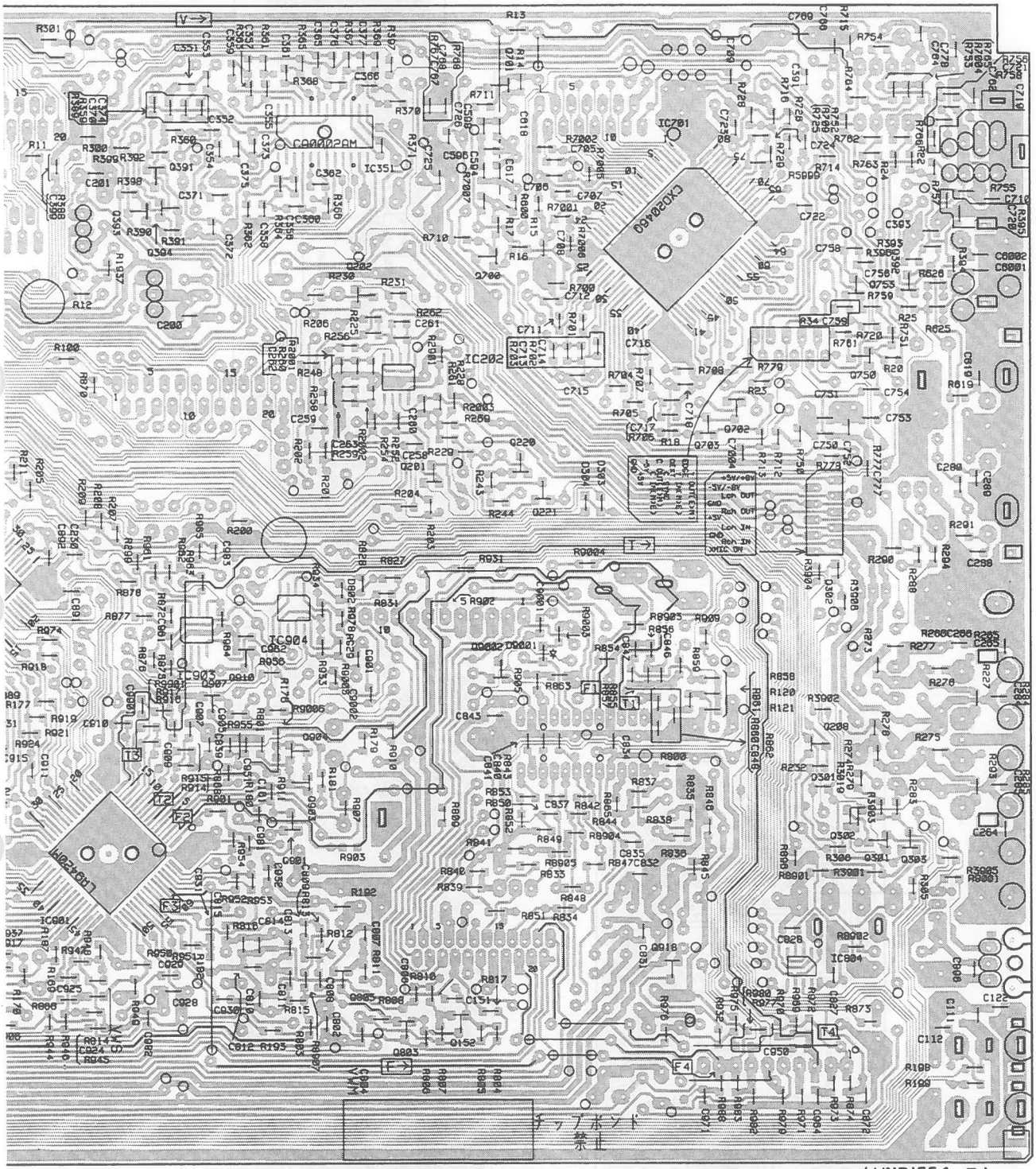

( VNP1554-E )

Q393 Q394 Q391 IC351 Q202 IC202 Q700 Q701 IC701 Q703 Q702 Q753 Q392
Q917 IC901 IC903 Q910 IC904 Q904 Q201 Q9002 Q220 Q208 Q750
Q907 Q901 Q903 Q805 Q803 Q152 Q221 Q918 IC804 Q301-Q303

## 4.4 FLKY AND KEYB ASSEMBLIES

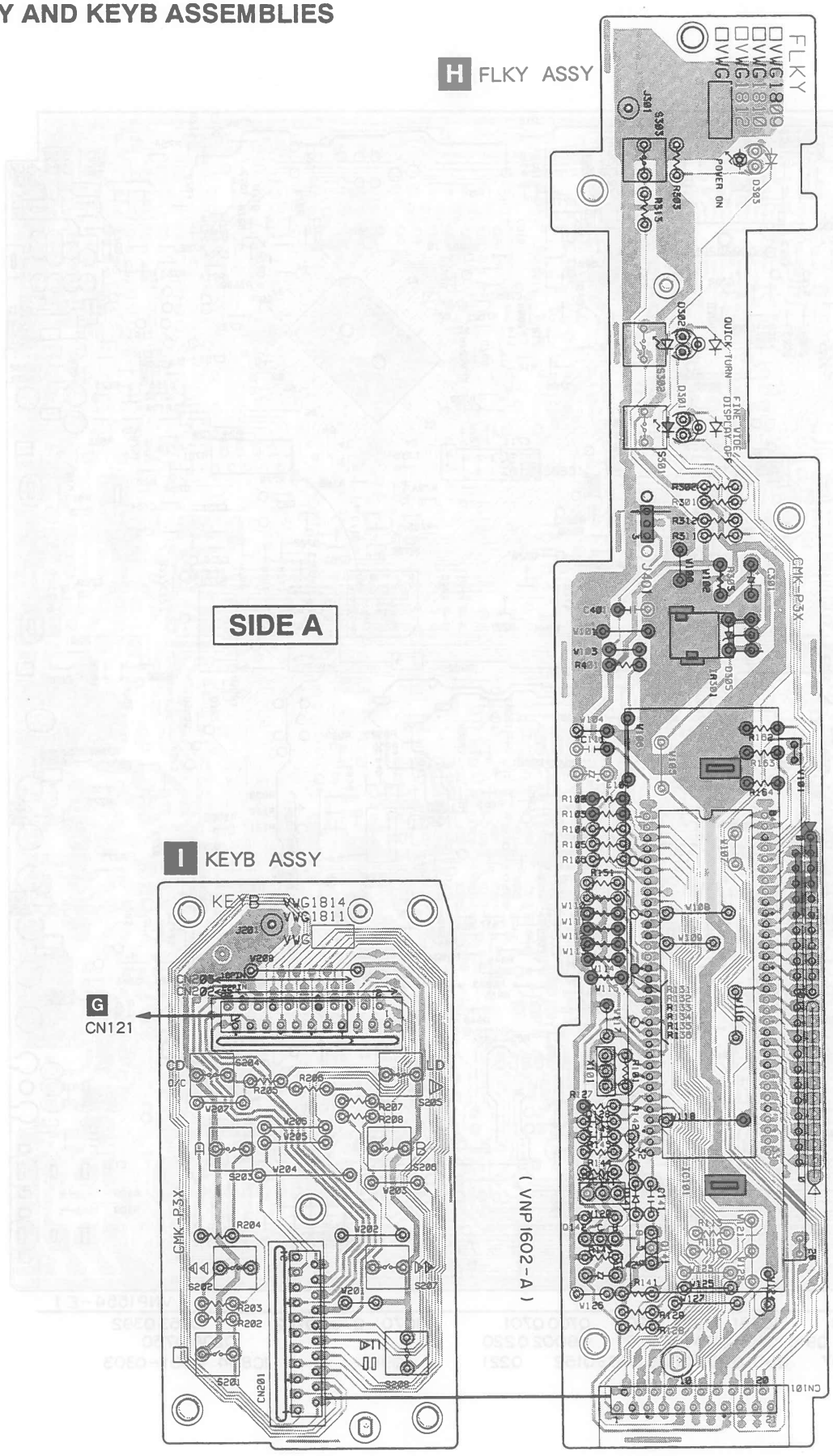

# 5. PCB PARTS LIST

*NOTES:*
- *Parts marked by "NSP" are generally unavailable because they are not in our Master Spare Parts List.*
- *The ⚠ mark found on some component parts indicates the importance of the safety factor of the part. Therefore, when replacing, be sure to use parts of identical designation.*
- *When ordering resistors, first convert resistance values into code form as shown in the following examples.*

*Ex.1 When there are 2 effective digits(any digit apart from 0), such as 560 ohm and 47k ohm(tolerance is shown by J=5%, and K=10%).*

*560 Ω → 56 × 10¹ → 561 ····· RD1/4PU 5 6 1 J*
*47k Ω → 47 × 10³ → 473 ····· RD1/4PU 4 7 3 J*
*0.5 Ω → 0R5 ····· RN2H 0 R 5 K*
*1 Ω → 1R0 ····· RS1P 1 R 0 K*

*Ex.2 When there are 3 effective digits(such as in high precision metal film resistors).*

*5.62k Ω → 562 × 10¹ → 5621 ····· RN1/4PC 5 6 2 1 F*

| Mark | No. | Description | Part No. |
|---|---|---|---|
| **LIST OF ASSEMBLIES** | | | |
| NSP | MACB ASSY | | VWM1535 |
| NSP | ├─ PKSB ASSY | | VWG1555 |
| NSP | ├─ FG ASSY | | VWG1556 |
| NSP | ├─ TNSB ASSY | | VWG1557 |
| NSP | ├─ BISB ASSY | | VWG1558 |
| NSP | └─ LMSB ASSY | | VWG1612 |
| ⚠ | POWER SUPPLY ASSY | | VWR1232 |
| NSP | MOTHER ASSY | | VWM1733 |
| | └─ MOTHER ASSY | | VWS1281 |
| NSP | FLKB ASSY | | VWM1735 |
| | ├─ FLKY ASSY | | VWG1810 |
| | └─ KEYB ASSY | | VWG1811 |
| **MACB ASSY** | | | |
| **OTHERS** | | | |
| | PC BOARD MACB | | VNP1479 |
| **A PKSB ASSY** | | | |
| **SWITCHES** | | | |
| | S104, S105 | | DSG1017 |
| **B FG ASSY** | | | |
| **SEMICONDUCTOR** | | | |
| | D101 | | GP1S24 |
| **C TNSB ASSY** | | | |
| **SWITCH** | | | |
| | S111 | | DSG1017 |
| **D BISB ASSY** | | | |
| **SWITCH** | | | |
| | S112 | | DSG1017 |
| **E LMSB ASSY** | | | |
| **SWITCHES** | | | |
| | S101-S103 | | DSG1017 |
| **OTHERS** | | | |
| | CN101 | 12P FFC CONNECTOR | 52044-1245 |
| **F POWER SUPPLY ASSY** | | | |
| **SEMICONDUCTORS** | | | |
| ⚠ | IC2 | | ICP-N15 |
| ⚠ | IC1 | | ICP-N20 |
| | IC20 | | HA17431P |
| | IC21 | | NJM4558D |
| | Q27, Q30, Q32 | | 2SA933S |
| | Q20, Q22 | | 2SB1566 |
| ⚠ | Q24 | | 2SB891F |
| | Q25, Q29, Q31 | | 2SC1740S |
| ⚠ | Q2, Q3 | | 2SC3377 |
| ⚠ | Q26 | | 2SD2007 |
| | Q21, Q23 | | 2SD2395 |
| ⚠ | Q1 | | 2SK2295 |
| | D25-D27, D30, D31 | | AG01Z-V0 |
| ⚠ | D1 | | D2SB60F4004 |
| ⚠ | D2 | | EG01C |
| ⚠ | D6 | | K1V24 |
| ⚠ | D5 | | MTZJ2.7B |
| | D29 | | MTZJ8.2B |
| ⚠ | D20 | | PS2501L1-1M |
| | D40 | | RD33FB2 |

| Mark | No. | Description | Part No. |
|---|---|---|---|
| | D23 | | RK36 |
| | D21, D22, D24 | | S2LA20 |
| ⚠ | D7 | | 1SS270A |
| **RESISTORS** | | | |
| ⚠ | R22-R25 | (47Ω) | VCN1033 |
| ⚠ | R27 | (1Ω) | VCN1047 |
| ⚠ | R29 | (68Ω) | VCN1048 |
| ⚠ | R31 | (4.7Ω) | VCN1049 |
| **OTHERS** | | | |
| ⚠ | F1 | FUSE(2A/125V) | REK1078 |
| ⚠ | F2 | FUSE | VEK1033 |
| ⚠ | F3, F4 | FUSE | VEK1034 |
| ⚠ | F5, F6 | FUSE(0.75A/125V) | VEK1035 |

## MOTHER ASSY

### OTHERS

| | | | |
|---|---|---|---|
| | PC BOARD MOTHER | | VNP1554 |

## G MOTHER ASSY

### SEMICONDUCTORS

| | | | |
|---|---|---|---|
| | IC904 | | BA10393F |
| | IC351 | | CA0002AM |
| | IC803 | | LA6510 |
| | IC400 | | LA7134M |
| | IC901 | | LA9420M |
| | IC801 | | LA9425 |
| | IC802 | | LC78620E |
| | IC703 | | MC14577CP |
| | IC500 | | PD0234A |
| | IC101 | | PD0245A2 |
| | IC902 | | TA8410AK |
| | IC804 | | TC4W53F |
| | IC202, IC903, IC905 | | XLA4560F |
| | Q1001, Q102, Q501, Q916 | | 2PB709A |
| | Q201, Q202, Q391, Q393, Q394 | | 2PD601A |
| | Q451, Q475, Q701, Q805 | | 2PD601A |
| | Q903, Q904, Q907, Q908, Q915 | | 2PD601A |
| | Q917 | | 2PD601A |
| | Q834 | | 2SA854S |
| | Q2901 | | 2SC1740S |
| | Q411, Q803 | | 2SC2412K |
| | Q152 | | 2SC3802K |
| | Q204, Q205 | | 2SD2144S |
| | Q208, Q301, Q392 | | DTA124EK |
| | Q103, Q303, Q901, Q910, Q918 | | DTC124EK |
| | Q840 | | FMY1A |
| | D102, D180, D203, D204, D801 | | 1SS254 |
| | D901, D902, D905, D963 | | 1SS254 |
| | D802 | | 1SS355 |
| | D805 | | KV1851 |
| | D110 | | MTZJ5.1B |

| Mark | No. | Description | Part No. |
|---|---|---|---|
| **COILS AND FILTERS** | | | |
| | F500, F547, F548, F5554 | CHIP BEAD | DTF1069 |
| | L413 | | LAU100J |
| | L410 | | LAU101J |
| | L351, L802-L804 | | LAU181J |
| | L100, L352, L412, L461, L470 | | LAU220J |
| | L800, L801, L806-L809 | | LAU220J |
| | L411, L571, L590, L591 | | LAU270J |
| | L420, L421, L580 | | LAU430J |
| | L462 | | LAU560J |
| | L414 | | LAU8R2J |
| | L460 | | LFA561J |
| | F501 | 14.3MHz FILTER | VTF1055 |
| | L5005 | FERRITE BEAD | VTH1024 |
| **CAPACITORS** | | | |
| | C562 | | CCSQCH050C50 |
| | C436, C617, C809, C811 | | CCSQCH070D50 |
| | C420, C421, C438, C466, C583 | | CCSQCH100D50 |
| | C370, C810, C846, C848, C891 | | CCSQCH101J50 |
| | C944 | | CCSQCH101J50 |
| | C434, C437, C474, C579 | | CCSQCH120J50 |
| | C416 | | CCSQCH121J50 |
| | C415, C418, C475, C594 | | CCSQCH150J50 |
| | C161, C258, C259, C353, C812 | | CCSQCH151J50 |
| | C352, C552 | | CCSQCH180J50 |
| | C5011, C618, C813, C823, C950 | | CCSQCH220J50 |
| | C162, C417, C591, C935 | | CCSQCH221J50 |
| | C371, C419, C433, C467, C931 | | CCSQCH270J50 |
| | C106, C107, C354, C435, C452 | | CCSQCH330J50 |
| | C553, C563, C580 | | CCSQCH330J50 |
| | C351, C425, C476, C598 | | CCSQCH390J50 |
| | C260-C263, C464, C468, C596 | | CCSQCH470J50 |
| | C6001, C6002, C619 | | CCSQCH470J50 |
| | C288 | | CCSQCH471J50 |
| | C375, C561, C806 | | CCSQCH680J50 |
| | C374, C814 | | CCSQCH820J50 |
| | C460, C462 | | CCSQCH910J50 |
| | C534, C836, C842 | | CEAL470M6R3 |
| | C450, C838 | | CEALNP470M6R3 |
| | C972 | | CEANP220M10 |
| | C227, C281, C904 | | CEAS010M50 |
| | C274, C275, C2901, C367, C439 | | CEAS100M50 |
| | C270, C271, C363, C364, C369 | | CEAS101M10 |
| | C424, C530, C550, C700, C701 | | CEAS101M10 |
| | C763, C765, C801, C803, C820 | | CEAS101M10 |
| | C895, C898, C917, C927, C933 | | CEAS101M10 |
| | C974, C975 | | CEAS101M10 |
| | C821, C922 | | CEAS220M25 |
| | C845, C870, C902, C926 | | CEAS2R2M50 |
| | C484 | | CEAS331M10 |
| | C368, C943 | | CEASR47M50 |
| | C987 | | CEHAQ220M50 |
| | C850 | | CEJA4R7M35 |
| | C256, C490, C907 | | CKSQYB102K50 |
| | C915, C981 | | CKSQYB104K25 |

| Mark | No. | Description | Part No. |
|---|---|---|---|
| | C919 | | CKSQYB332K50 |
| | C361, C362 | | CKSQYB392K50 |
| | C355-C358, C377, C909 | | CKSQYB472K50 |
| | C110, C122, C160, C196-C198 | | CKSQYF103Z50 |
| | C289, C372, C373, C376, C451 | | CKSQYF103Z50 |
| | C454, C532, C533, C570 | | CKSQYF103Z50 |
| | C577, C578, C581, C802, C804 | | CKSQYF103Z50 |
| | C807, C819, C822, C831, C832 | | CKSQYF103Z50 |
| | C834, C835, C843, C876 | | CKSQYF103Z50 |
| | C883, C884, C888, C889, C892 | | CKSQYF103Z50 |
| | C897, C918, C928, C929, C932 | | CKSQYF103Z50 |
| | C937, C938, C941, C961, C962 | | CKSQYF103Z50 |
| | C964, C971, C982 | | CKSQYF103Z50 |
| | C102, C103, C151, C284, C285 | | CKSQYF104Z25 |
| | C365, C366, C391, C413 | | CKSQYF104Z25 |
| | C422, C423, C453, C457, C458 | | CKSQYF104Z25 |
| | C485, C492, C494, C5006, C531 | | CKSQYF104Z25 |
| | C539, C551, C574, C582, C587 | | CKSQYF104Z25 |
| | C589, C592, C725, C726, C764 | | CKSQYF104Z25 |
| | C766, C827, C828, C840, C841 | | CKSQYF104Z25 |
| | C847, C872-C874, C896, C901 | | CKSQYF104Z25 |
| | C910-C912, C976, C983 | | CKSQYF104Z25 |
| | C837, C921, C930 | | CKSQYF223Z50 |
| | C359, C360, C905, C951 | | CKSQYF224Z25 |
| | C280 | | CKSQYF333Z50 |
| | C465, C808, C815, C875, C877 | | CKSQYF473Z25 |
| | C924, C925 | | CKSQYF473Z25 |
| | C942 | | CQMA103J50 |
| | C913, C920 | | CQMA104J50 |
| | C479, C908, C973 | | CQMA154J50 |
| | C903 | | CQMA222J50 |
| | C278, C282 | | CQMA332J50 |
| | C923 | | CQMA473J50 |
| | C934 | | CQMA681J50 |
| | C483 | | CQMA683J50 |
| | C871 | (10μF/16V NP) | VCH1152 |
| | VC901 | (20pF) | VCM-008 |

## RESISTORS

| | | | |
|---|---|---|---|
| | R420 | | RD1/4PU470J |
| | R490, R987, R989 | | RN1/10SE103D |
| | R880, R883 | | RN1/10SE104D |
| | R765, R766 | | RN1/10SE222D |
| | R764 | | RN1/10SE332D |
| | R879, R986, R990 | | RN1/10SE333D |
| | R259-R262, R881, R882 | | RN1/10SE473D |
| | R927 | | RN1/6PQ5101F |
| | VR450(2.2kΩ) | | PCP1025 |
| | VR603(4.7kΩ) | | RCP1020 |
| | VR604, VR607, VR608(47kΩ) | | RCP1047 |
| | Other Resistors | | RS1/10S□□□J |

## OTHERS

| | | | |
|---|---|---|---|
| | CN108 | 12P FFC CONNECTOR | 52045-1245 |
| | CN121 | 16P FFC CONNECTOR | 52045-1645 |
| | CN102 | 21P FFC CONNECTOR | 52045-2145 |
| | CN106 | 11P TOP POST | B11P-SHF-1AA |
| | JA8 | OPTICAL OUTPUT MODULE | GP1F32T |
| | JA3, JA4 | REMOTE CONTROL JACK | PKN1004 |
| | | PCB BINDER | VEF1040 |
| | JA6 | 4P PIN JACK | VKB1065 |
| | JA13 | RF PIN JACK | VKB1068 |
| | JA14 | 2P PIN JACK | VKB1069 |
| | CN103 | 23P FFC CONNECTOR | VKN1199 |
| | | SCREW TERMINAL | VNE1948 |
| | KN101, KN102 | EARTH METAL FITTING | VNF1084 |
| | X101 | CERAMIC RESONATOR(9.00MHz) | VSS1040 |
| | X550 | CRYSTAL RESONATOR(14.318MHz) | VSS1073 |
| | X801 | CRYSTAL RESONATOR(16MHz) | VSS1081 |

## FLKB ASSY

### OTHERS

| | | | |
|---|---|---|---|
| | | PC BOARD FLKB | VNP1602 |

## H FLKY ASSY

### SEMICONDUCTORS

| | | | |
|---|---|---|---|
| | IC101 | | PD3360A |
| | IC141 | | S-806D |
| | Q142 | | DTA144ES |
| | Q141 | | DTC114ES |
| | D141 | | 1SS254 |
| | D301, D302 | | SLR-342MCT31 |
| | D303 | | SLR-342VCT31 |

### SWITCHES

| | | | |
|---|---|---|---|
| | S301-S303 | | ASG1034 |

### CAPACITORS

| | | | |
|---|---|---|---|
| | C142, C301 | | CEAL100M16 |
| | C101 | | CEAL470M6R3 |
| | C111, C141 | | CKPUYF223Z25 |
| | C143 | | CKPUYY103M16 |

### RESISTORS

| | | | |
|---|---|---|---|
| | All Resistors | | RD1/4PU□□□J |

### OTHERS

| | | | |
|---|---|---|---|
| | CN101 | 21P FFC CONNECTOR | 52044-2145 |
| | X101 | CERAMIC RESONATOR(8MHz) | EFOEC8004A4 |
| | | REMOTE RECEIVER UNIT | GP1U28X |
| | V101 | FL TUBE | VAW1041 |
| | | SPACER | VEC1599 |
| | | FL HOLDER | VNF1087 |

## I KEYB ASSY

### SWITCHES

| | | | |
|---|---|---|---|
| | S201-S208 | | ASG1034 |

### RESISTORS

| | | | |
|---|---|---|---|
| | All Resistors | | RD1/4PU□□□J |

### OTHERS

| | | | |
|---|---|---|---|
| | CN203 | FFC BOTTOM CONNECTOR 16P | 52492-1620 |
| | CN201 | FFC BOTTOM CONNECTOR 21P | 52492-2120 |

# 6. ADJUSTMENTS (調整方法)

## 6.1 ADJUSTMENT ITEMS AND LOCATION (調整項目と調整位置)

### ■Adjustment Points (PCB Part)

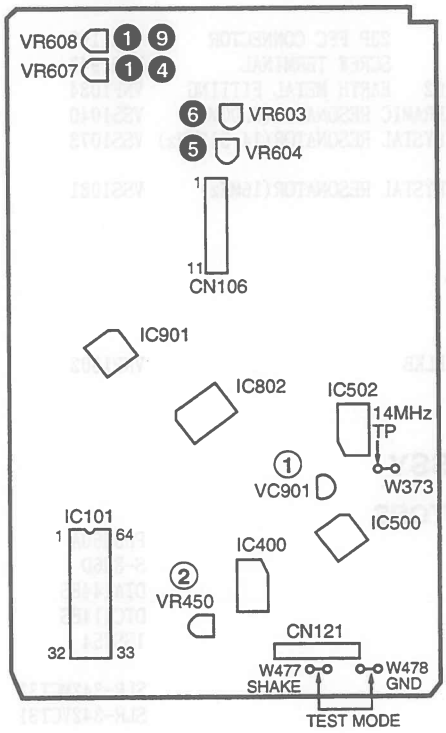


### ■Adjustment Items

[Mechanical Part]

1. Tilt Offset Adjustment (チルトオフセット調整)
2. Tangential Direction Angle Adjustment for Side A (A面タンジェンシャル傾き調整)
3. Spindle Motor Centering Adjustment for Side A (A面スピンドル芯出し調整)
4. Crosstalk Check and Fine Tilt Offset Adjustment for Side A (A面クロストーク確認及び，チルトオフセット微調)
5. Focus Servo Loop Gain Adjustment (フォーカスサーボループゲイン調整)
6. Tracking Servo Loop Gain Adjustment (トラッキングサーボループゲイン調整)
7. Tangential Direction Angle Adjustment for Side B (B面タンジェンシャル傾き調整)
8. Spindle Motor Centering Adjustment for Side B (B面スピンドル芯出し調整)
9. Crosstalk Check and Fine Tilt Offset Adjustment for Side B (B面クロストーク確認及び，チルトオフセット微調)

[Electrical Part]

① Master Clock Adjustment (マスタークロック調整)
② Output Video Level Adjustment (出力ビデオレベル調整)

### ■Adjustment Points (Mechanism Part)

[Side A]

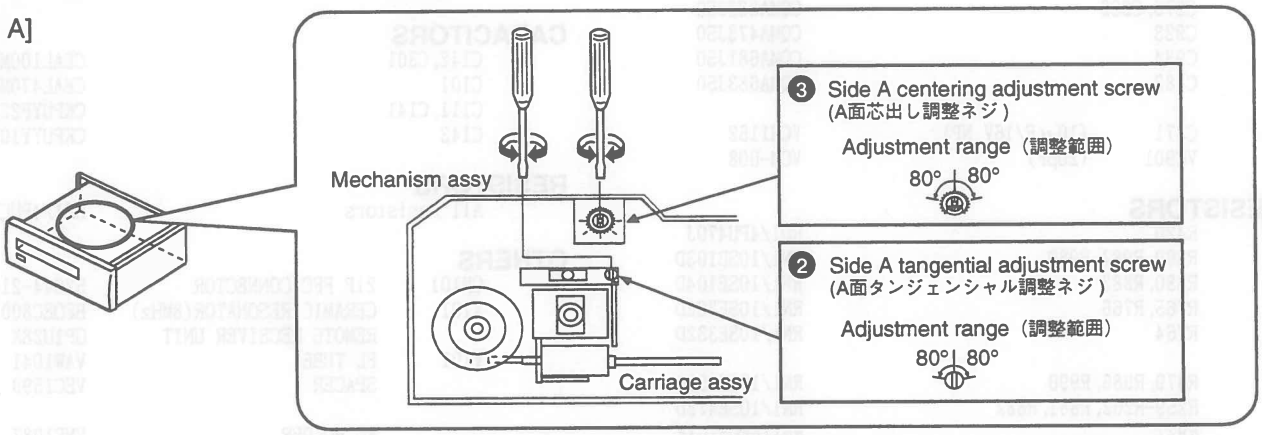


[Side B]

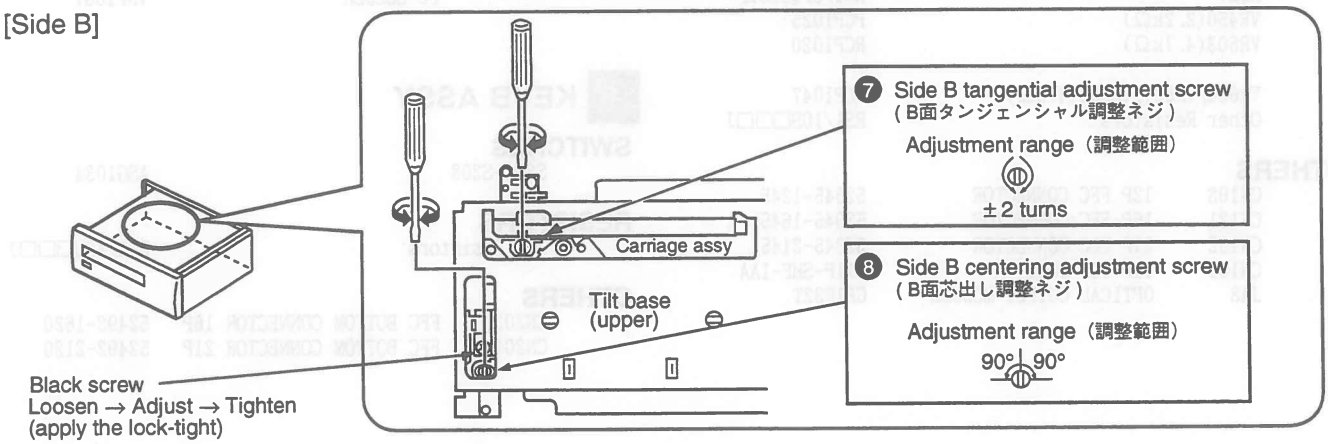

## 6.2 JIGS AND MEASURING INSTRUMENTS (調整に必要な治工具類)

| | | | |
|---|---|---|---|
| CD test disc (YEDS-7) | LD test disc (GGV1012) | ⊖ Screwdriver (medium) | ⊖ Screwdriver (small) |
| ⊖ Precise screwdriver | ⊕ Screwdriver (large) | ⊕ Screwdriver (medium) | 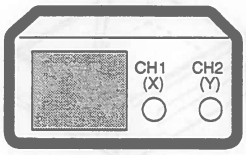  Dual-trace oscilloscope (with delay) Frequency band ≧ 40MHz |
| Frequency counter Display digit ≧ 8-digit | 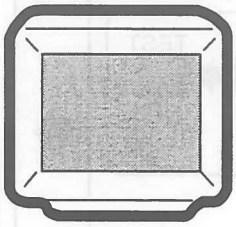 TV monitor | Test mode remote control unit (GGF1067) | |

## 6.3 TEST MODE (テストモード)

### TEST MODE: ON

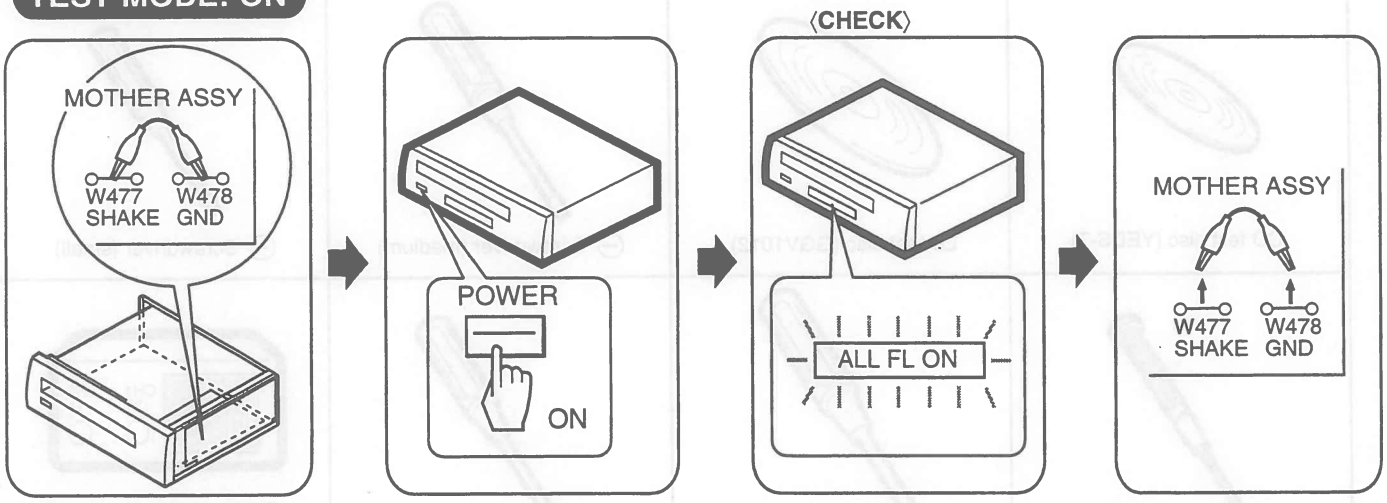


OR

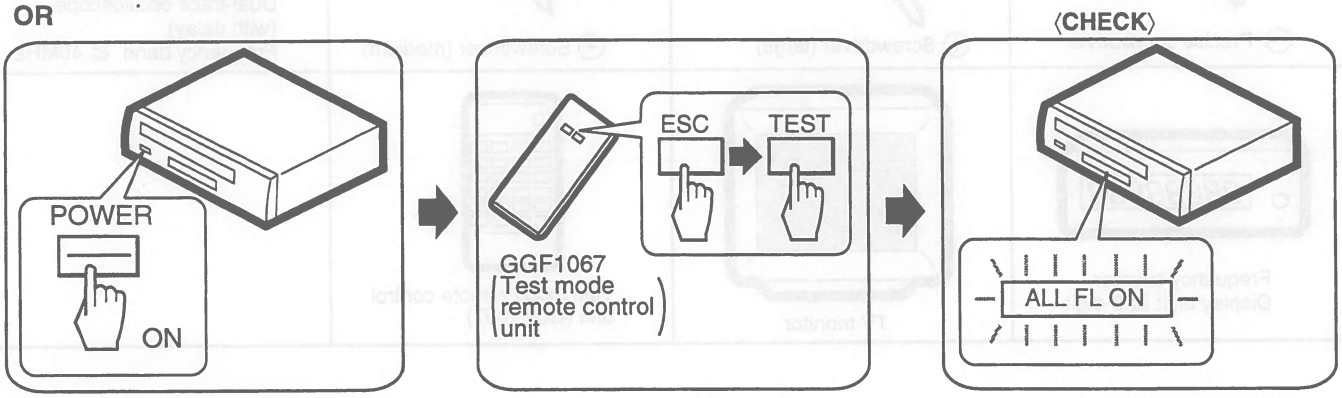


### TEST MODE: DISC SET

- **With TRAY** (トレー有りの場合)

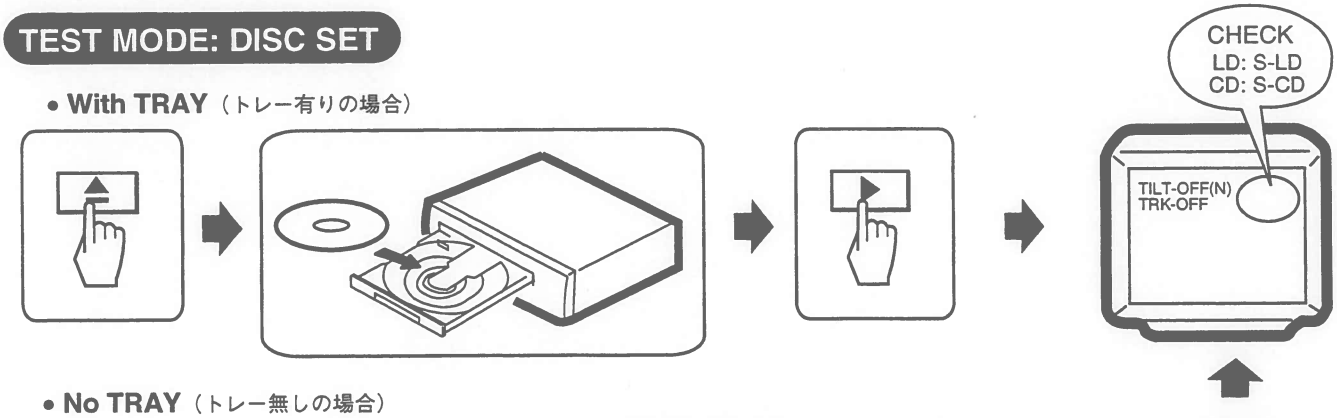


- **No TRAY** (トレー無しの場合)

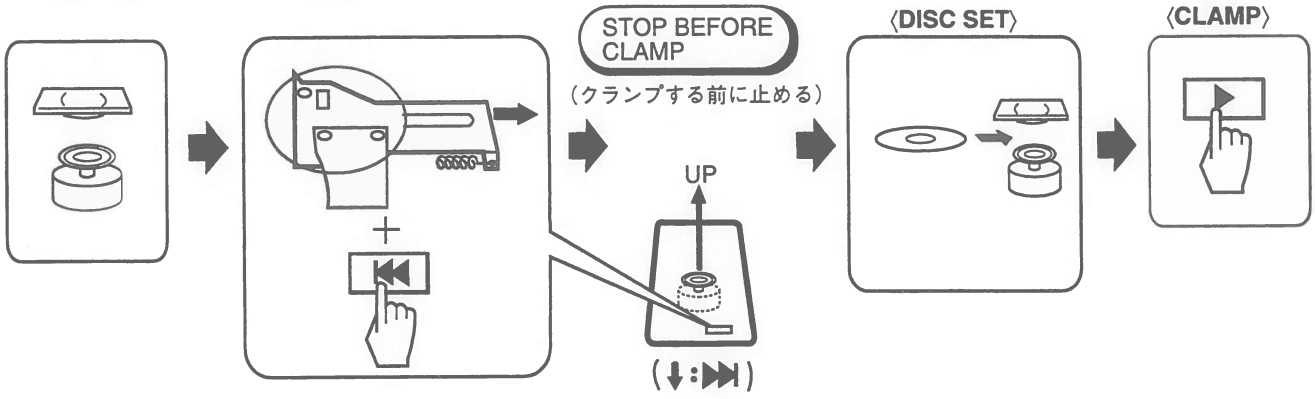

## TEST MODE: PLAY

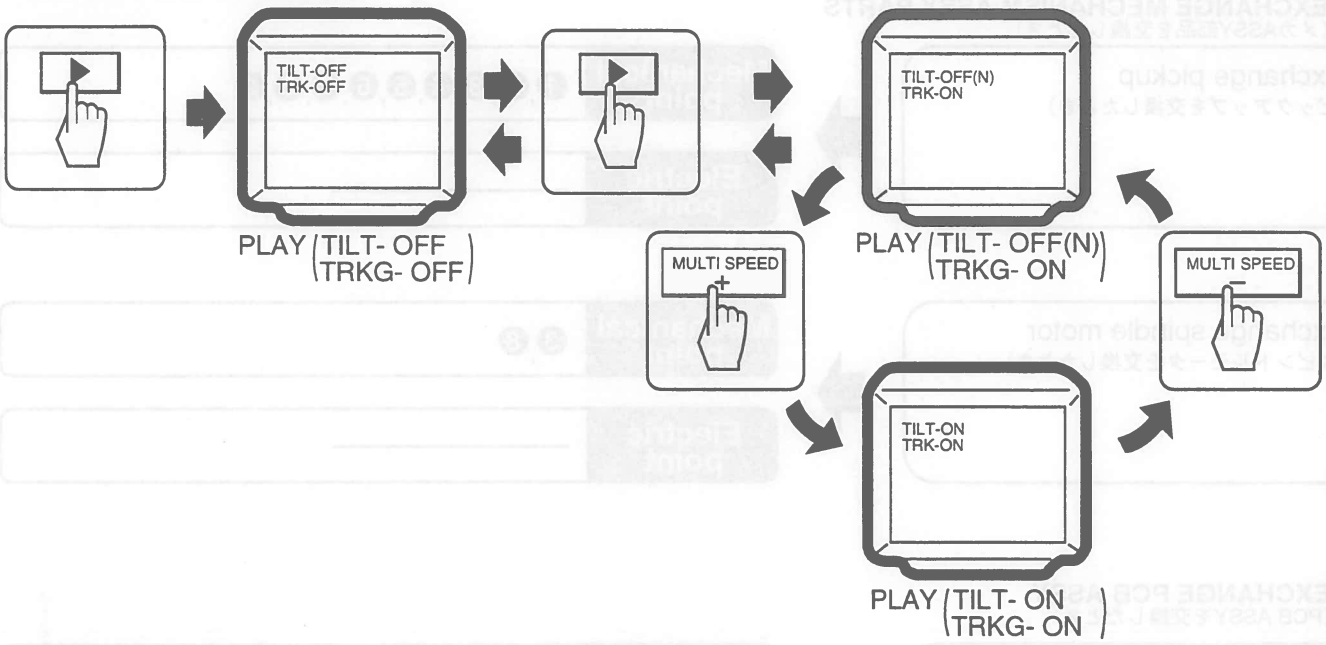


## TEST MODE: OFF

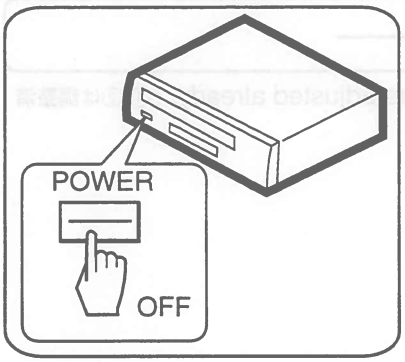


OR

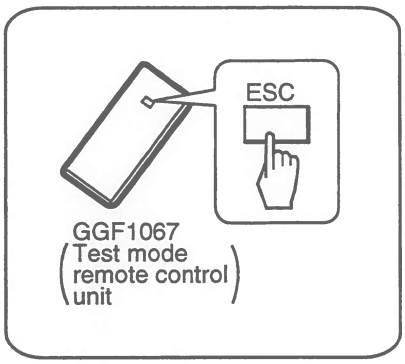

## 6.4 NECESSARY ADJUSTMENT POINTS（必要な調整項目）

| When（このような時） | Adjustment Points | |
|---|---|---|
| **■ EXCHANGE MECHANISM ASSY PARTS**<br>（メカASSY部品を交換したとき） | | |
| Exchange pickup<br>(ピックアップを交換したとき) | Mechanical point | ❶,❷,❸,❹,❺,❻,❼,❽,❾ |
| | Electric point | ———— |
| Exchange spindle motor<br>(スピンドルモータを交換したとき) | Mechanical point | ❸,❽ |
| | Electric point | ———— |
| **■ EXCHANGE PCB ASSY**<br>（PCB ASSYを交換したとき） | | |
| Exchange board<br>MOTHER ASSY<br>(マザーボードを交換したとき) | Mechanical point | ❶,❹,❺,❻,❾ |
| | Electric point | ———— |

Note : ① and ② are adjusted already. ( ①,②は調整済 )

## 6.5. MECHANICAL ADJUSTMENT (機構系の調整)

### 1 Tilt Offset Adjustment
(チルトオフセット調整)

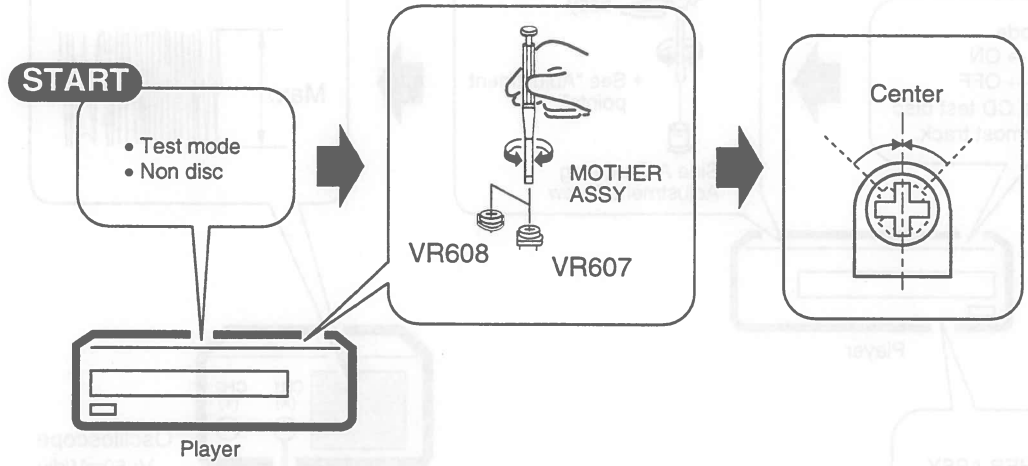


### 2 Tangential Direction Angle Adjustment for Side A
(A面タンジェンシャル傾き調整)

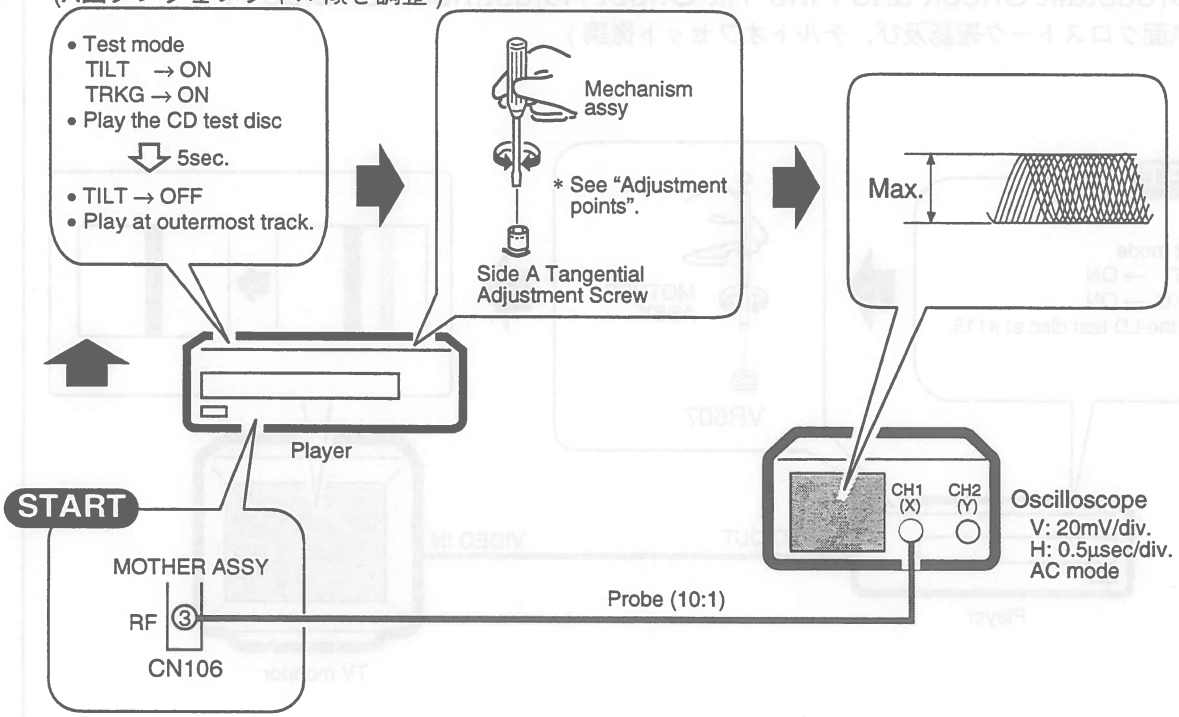


outermost : 最外周

## 3 Spindle Motor Centering Adjustment for Side A

(A面スピンドル芯出し調整)

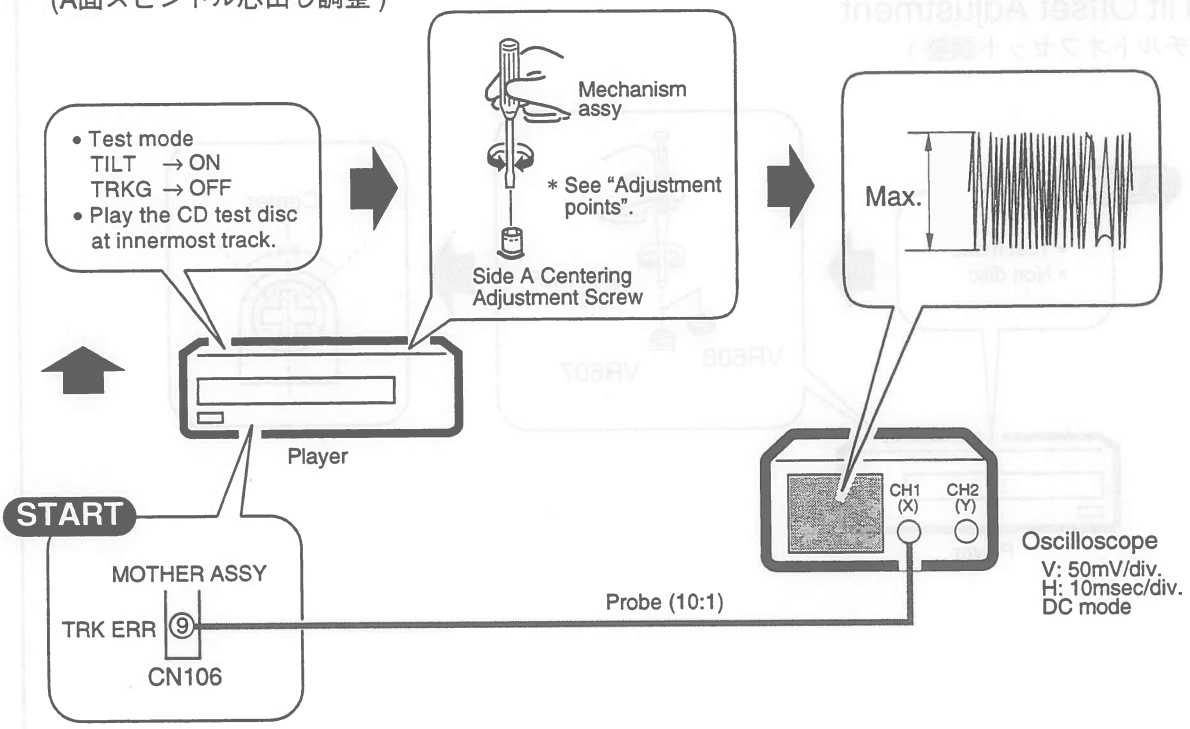


innermost : 最内周

## 4 Crosstalk Check and Fine Tilt Offset Adjustment for Side A

(A面クロストーク確認及び，チルトオフセット微調)

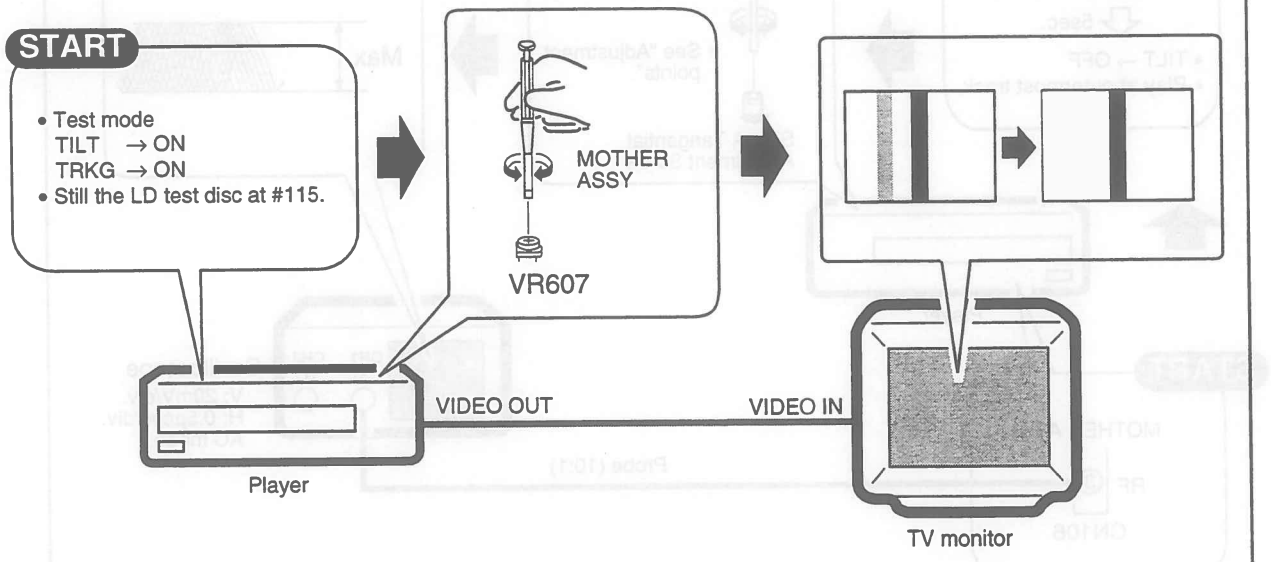

## 5 Focus Servo Loop Gain Adjustment
(フォーカスサーボループゲイン調整)

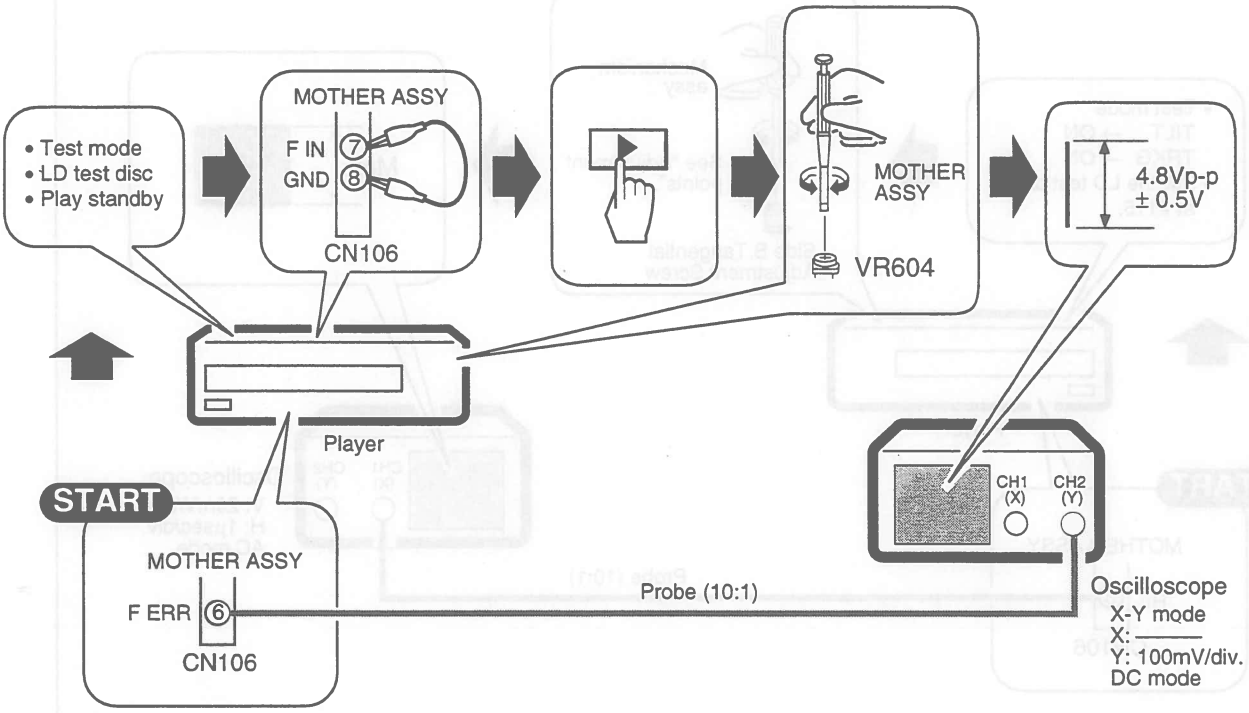


## 6 Tracking Servo Loop Gain Adjustment
(トラッキングサーボループゲイン調整)

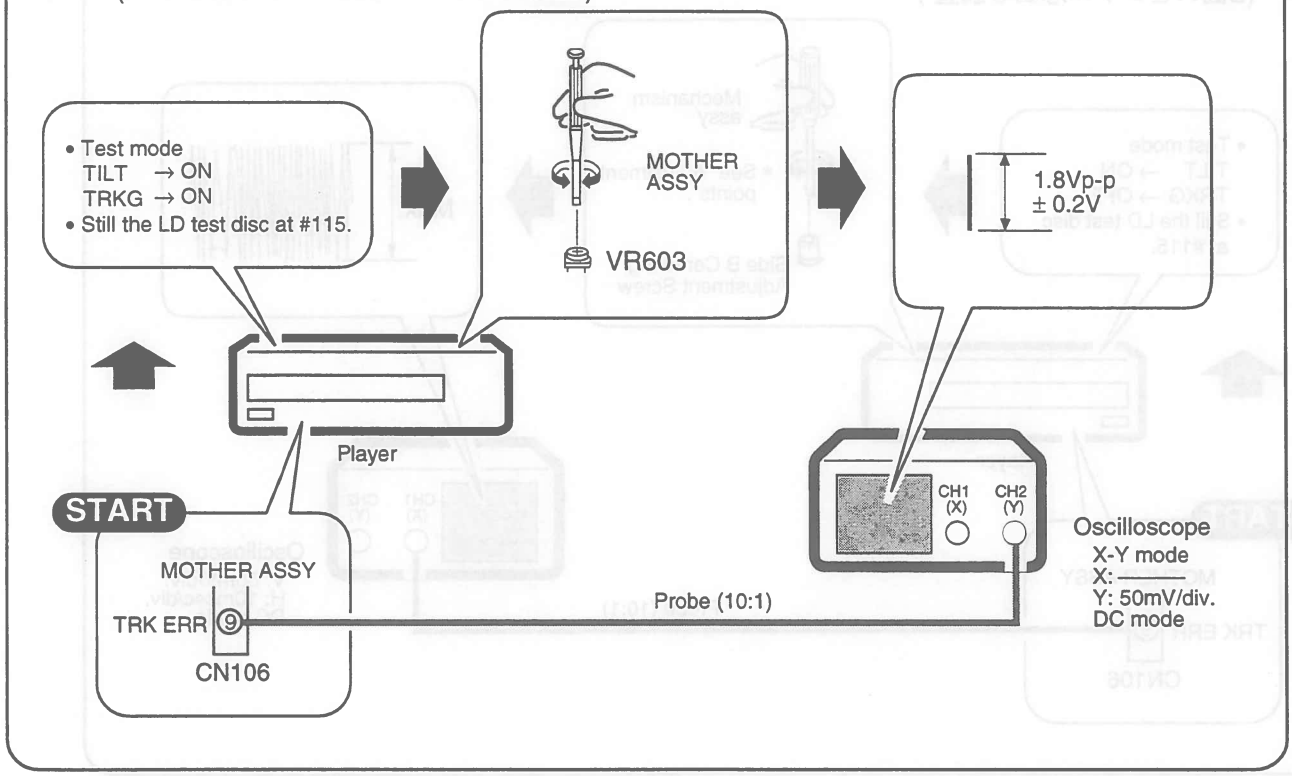

## 7 Tangential Direction Angle Adjustment for Side B
(B面タンジェンシャル傾き調整 )

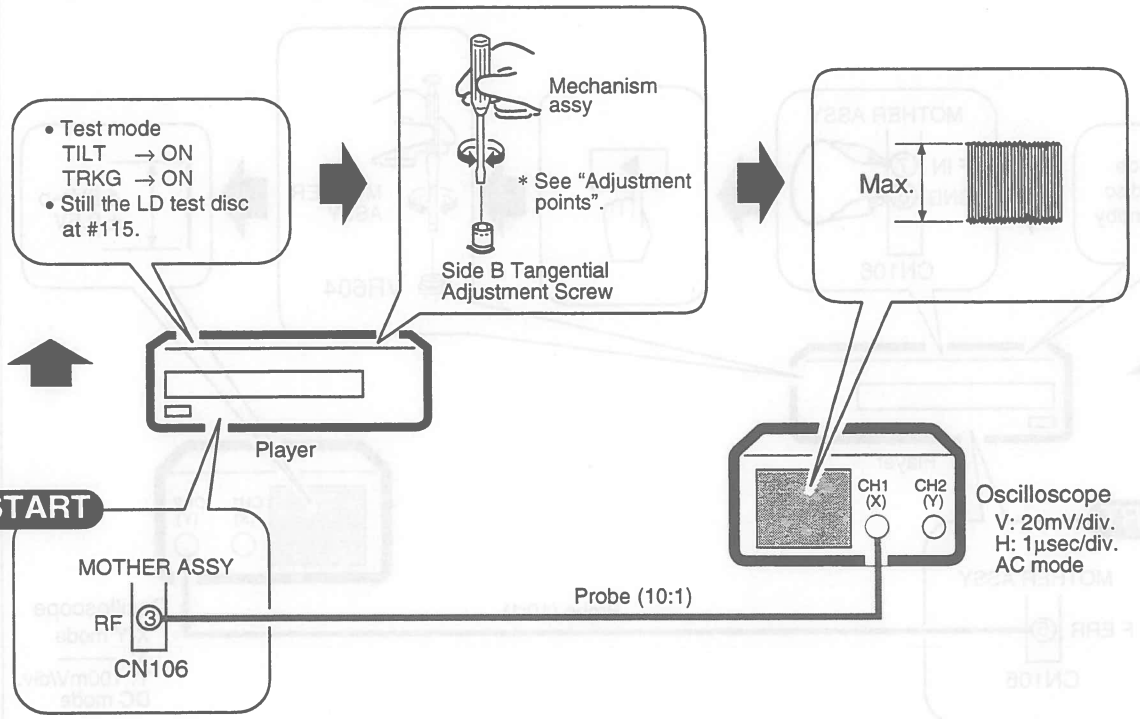


## 8 Spindle Motor Centering Adjustment for Side B
(B面スピンドル芯出し調整 )

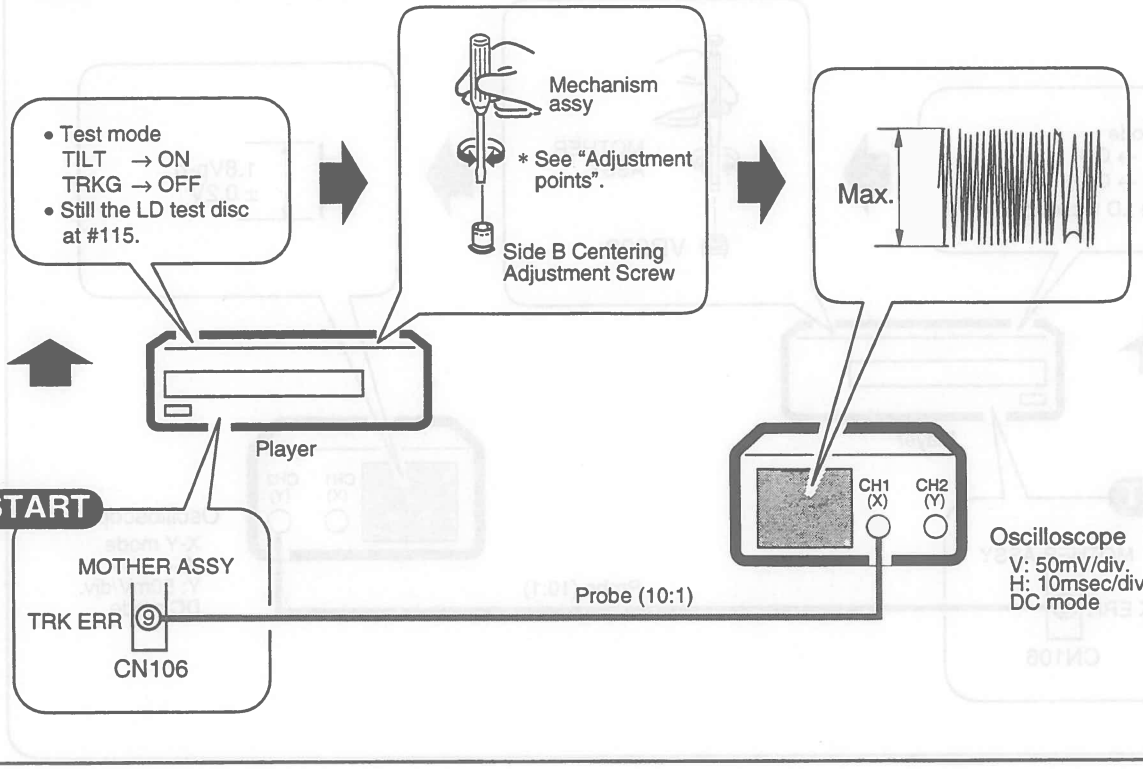

## 9 Crosstalk Check and Fine Tilt Offset Adjustment for Side B

(B面クロストーク確認及び，チルトオフセット微調 )

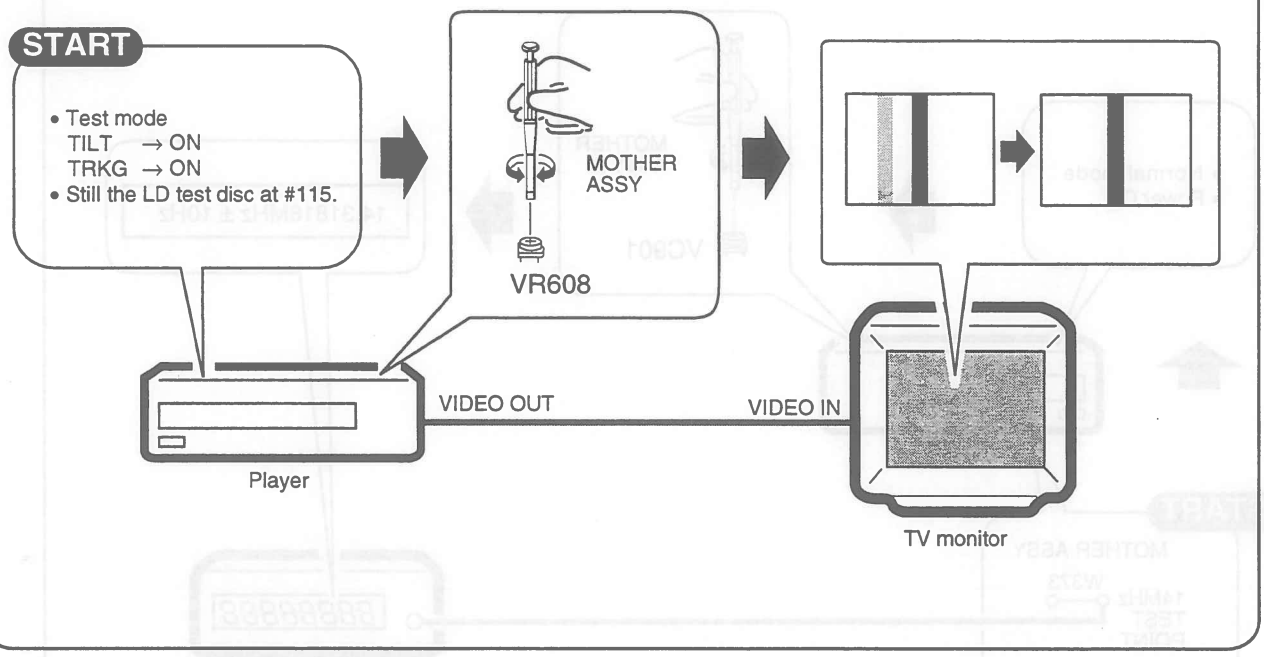

## 6.6 ELECTRICAL ADJUSTMENT (電気系の調整)

### ① Master Clock Adjustment
(マスタークロック調整)

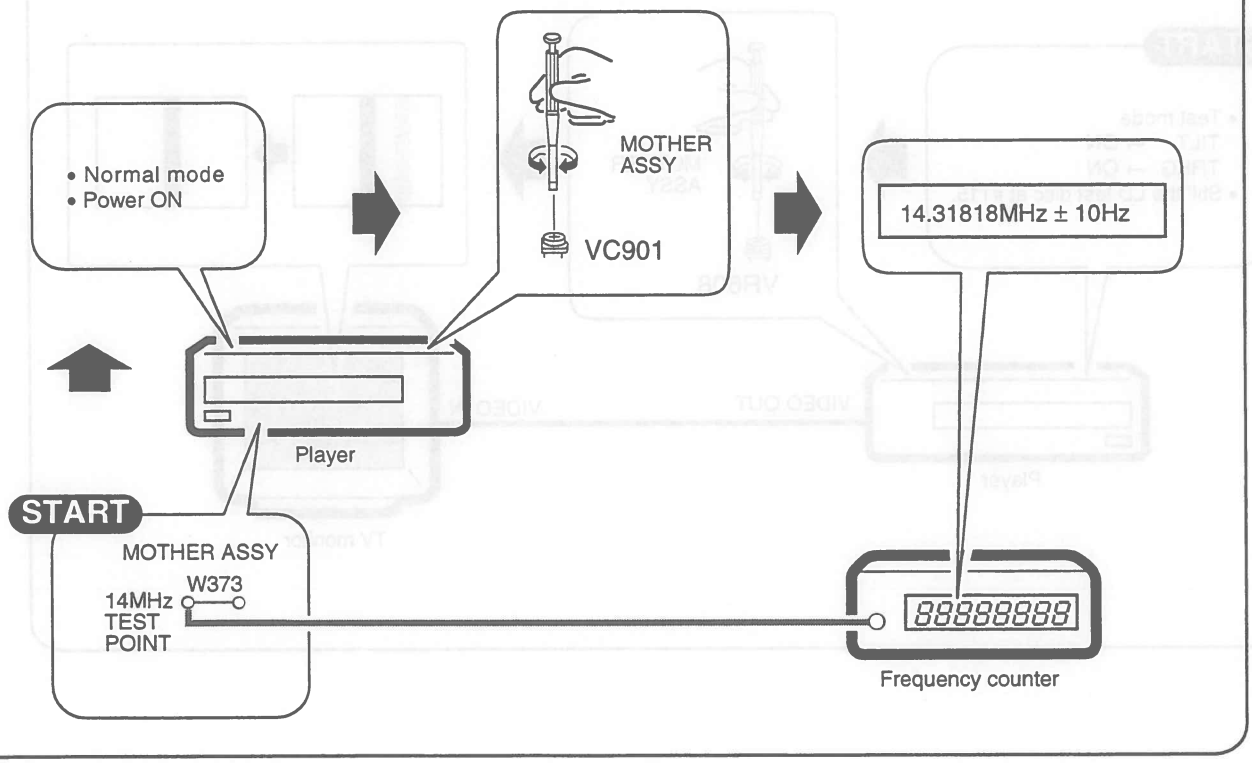


### ② Output Video Level Adjustment
(出力ビデオレベル調整)

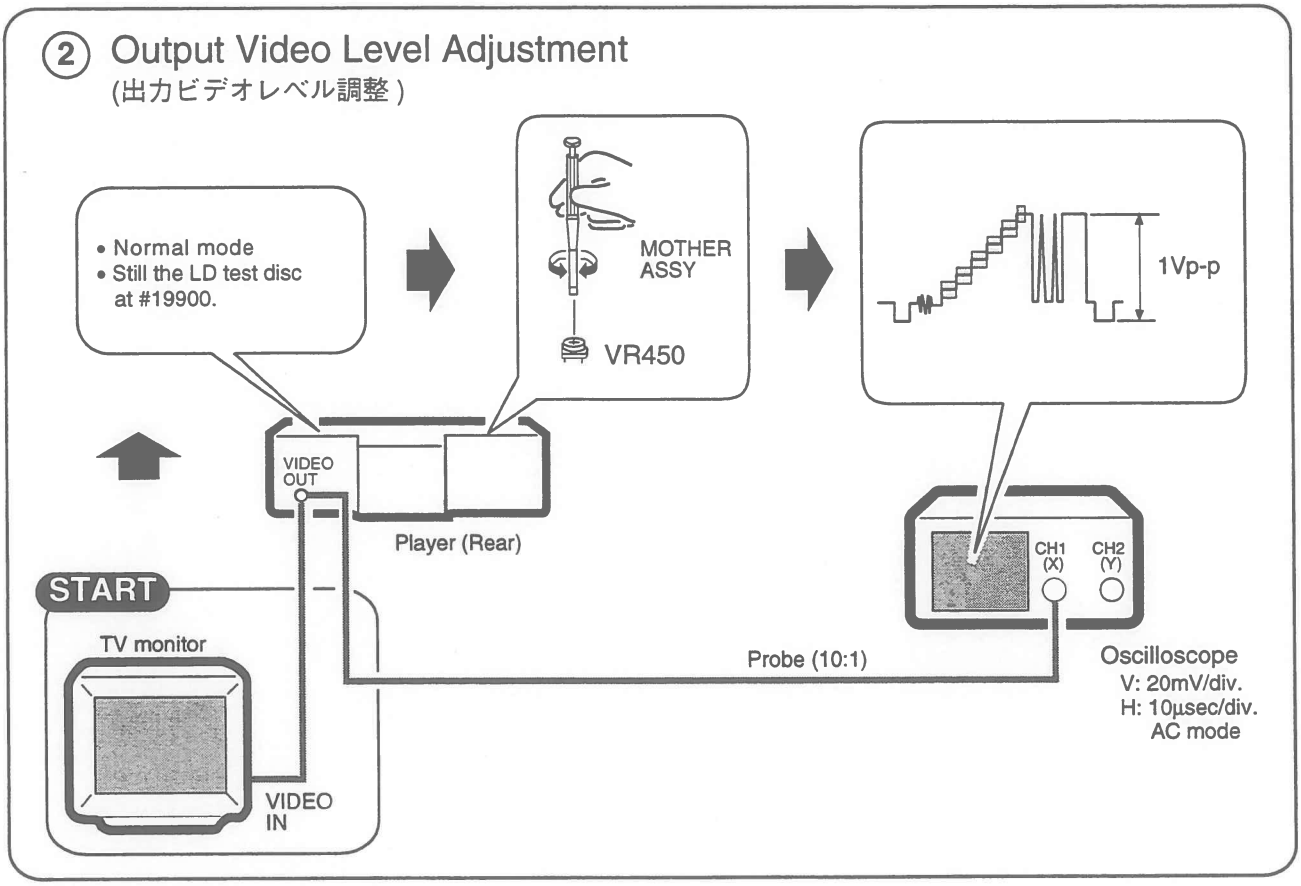

## 6.7 OPERATIONS IN THE TEST MODE（テストモード時のサービス用リモコン操作方法）

### ■ Test Mode Remote Control Unit (GGF1067)

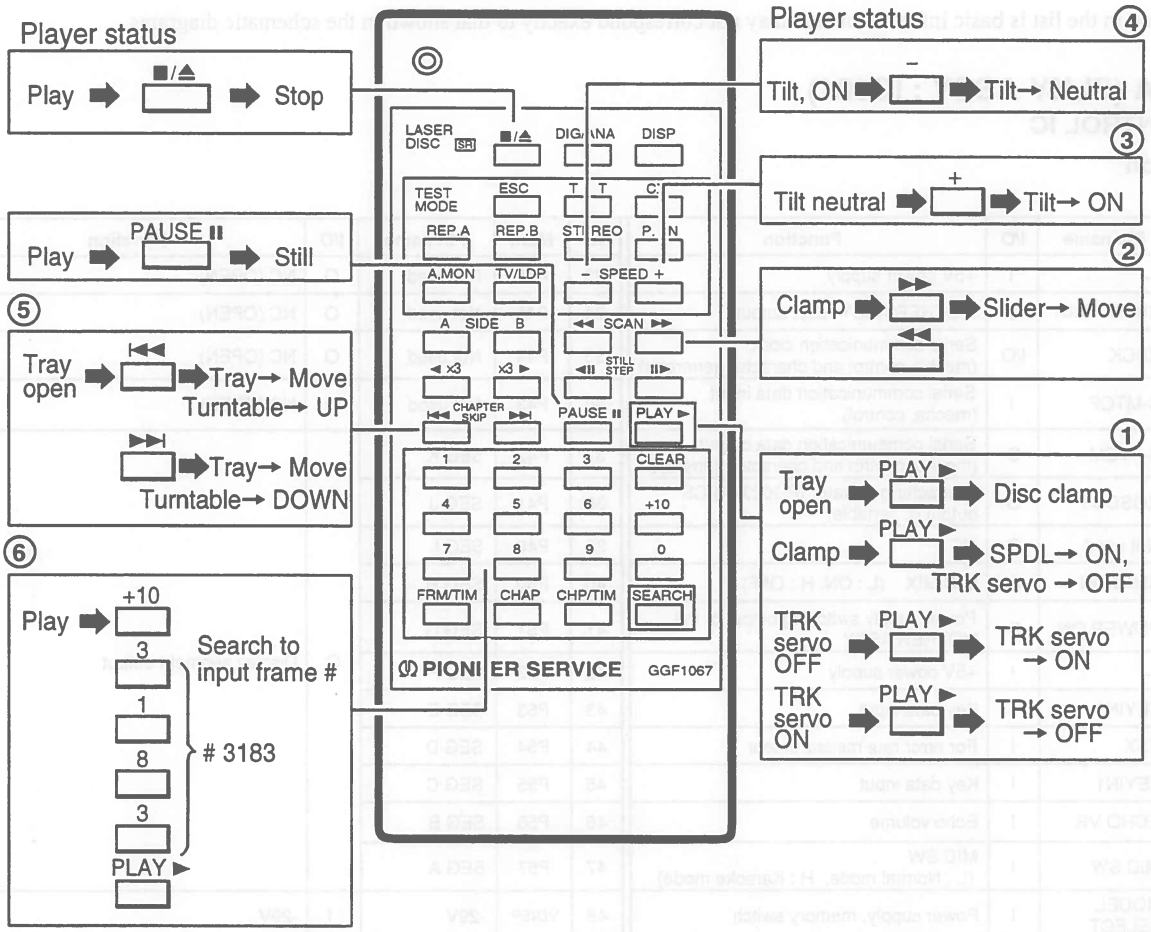


### ■ TV Monitor Display

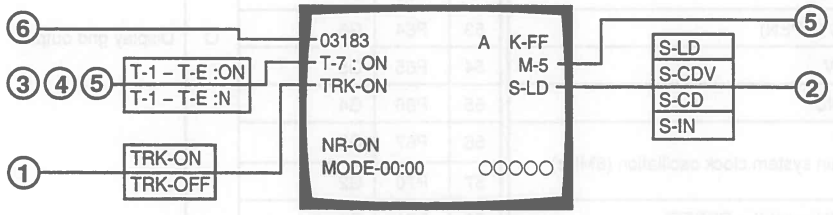

# 7. GENERAL INFORMATION

## 7.1 PARTS

### 7.1.1 IC

• The information in the list is basic information and may not correspond exactly to that shown in the schematic diagrams.

### ■ PD3360A (FLKY ASSY : IC101)

**• MODE CONTROL IC**

**• Pin Function**

| No. | Mark | Pin name | I/O | Function |
|---|---|---|---|---|
| 1 | VCC | — | I | +5V power supply |
| 2 | P90 | XRESET OUT | O | MOTHER ASSY reset output |
| 3 | SCK1 | XSCK | I/O | Serial communication clock (mecha. control and character generator) |
| 4 | SI1 | S-MTOF | I | Serial communication data input (mecha. control) |
| 5 | SO1 | S-FTOM | O | Serial communication data output (mecha. control and character generator) |
| 6 | P94 | XOSDCS | O | Character generator (PD0234A) CS output (L : enable) |
| 7 | P95 | Not used | O | NC |
| 8 | P96 | XMIC ON | O | MIC MIX (L : ON, H : OFF) |
| 9 | P97 | POWER ON | O | Power supply switching output of the MOTHER ASSY |
| 10 | AVCC | — | I | +5V power supply |
| 11 | P00 | KEYIN3 | I | Key data input |
| 12 | P01 | FSX | I | For error rate measurement |
| 13 | P02 | KEYIN1 | I | Key data input |
| 14 | P03 | ECHO VR | I | Echo volume |
| 15 | P04 | MIC SW | I | MIC SW (L : Normal mode, H : Karaoke mode) |
| 16 | P05 | MODEL SELECT | I | Power supply, memory switch |
| 17 | P06 | MODEL SELECT | I | CD tray, DVP switch |
| 18 | P07 | MODEL SELECT | I | Main section key switch |
| 19 | AVSS | — | I | GND |
| 20 | TEST | Not used | I | GND |
| 21 | X2 | Not used | O | NC (OPEN) |
| 22 | X1 | Not used | I | +5V |
| 23 | VSS | GND | I | GND |
| 24 | OSC1 | — | I | Main system clock oscillation (8MHz) |
| 25 | OSC2 | — | O | |
| 26 | XRST | XRESET IN | I | CPU reset (L : RESET) |
| 27 | IRQ0 | SHAKE | I/O | Mechanism control serial communication requirement |
| 28 | IRQ1 | SEL IR | I | Remote control input |
| 29 | P14 | Not used | O | NC (OPEN) |
| 30 | P15 | EFLG | I | For error rate measurement |
| 31 | P16 | Not used | I | GND |
| 32 | P47 | DOGFOOD | O | Pulse output for WATCH DOG |
| 33 | P46 | Not used | O | NC (OPEN) |
| 34 | P45 | Not used | O | NC (OPEN) |
| 35 | P44 | Not used | O | NC (OPEN) |
| 36 | P43 | Not used | O | NC (OPEN) |
| 37 | P42 | SEG K | O | Display segment output |
| 38 | P41 | SEG J | | |
| 39 | P40 | SEG I | | |
| 40 | P50 | SEG H | | |
| 41 | P51 | SEG G | | |
| 42 | P52 | SEG F | | |
| 43 | P53 | SEG E | | |
| 44 | P54 | SEG D | | |
| 45 | P55 | SEG C | | |
| 46 | P56 | SEG B | | |
| 47 | P57 | SEG A | | |
| 48 | VDISP | -29V | I | -29V |
| 49 | P60 | G10 | O | Display grid output |
| 50 | P61 | G9 | | |
| 51 | P62 | G8 | | |
| 52 | P63 | G7 | | |
| 53 | P64 | G6 | | |
| 54 | P65 | G5 | | |
| 55 | P66 | G4 | | |
| 56 | P67 | G3 | | |
| 57 | P70 | G2 | | |
| 58 | P71 | G1 | | |
| 59 | P72 | LED (DISOFF) (FINE WIDE, PICTURE CONT) | O | LED output : Display OFF or picture control (Fine wide) indication |
| 60 | P73 | LED (QCKTRN) | O | LED output : Quick turn indication |
| 61 | P74 | LED (STANDBY) | O | LED output : Standby |
| 62 | P75 | Not used | O | NC (OPEN) |
| 63 | P76 | Not used | O | NC (OPEN) |
| 64 | P77 | Not used | I | NC (OPEN) |

## ■ PD0245A2 (MOTHER ASSY : IC101)

- **MECHANISM CONTROL IC**
- **Pin Arrangement (Top View)**

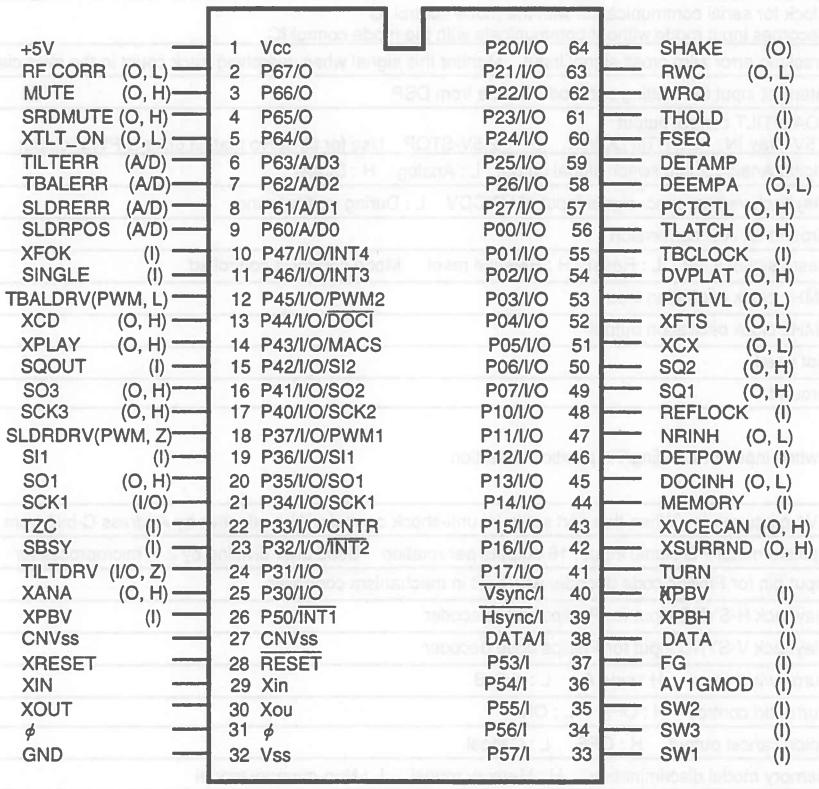


- **Pin Function**

| No. | Pin Name | I/O | Function |
|---|---|---|---|
| 1 | VCC | I | Power supply pin Apply 5V±10% |
| 2 | RFCORR | O | RF correction switch signal output H : Gain UP CD, CDV-A : Low, CAV inner circuit gain up, others are High |
| 3 | MUTE | O | Audio mute control signal output of audio system L : Release MUTE H : MUTE |
| 4 | SRDMUTE | O | Mute control signal output for AC3 Release MUTE during playback. L : Release MUTE H : MUTE |
| 5 | XTLT ON | O | Tilt operation information L : During operation In the OPEN/CLOSE, the voltage will up about 10% by using this port. |
| 6 | TILTERR | I A/D | This signal is A/D converted as the tilt servo control input. Control the tilt motor so that this signal becomes 2.5V. |
| 7 | TBALERR | I A/D | Tracking balance error signal input This signal is A/D converted as the tracking offset control input. |
| 8 | SLDERR | I A/D | This signal is A/D converted as the slider servo control input. Control the tilt motor so that this signal becomes 2.5V. |
| 9 | SLDPOS | I A/D | Pickup position detection switch input Detect the position by reading A/D input value which each switches are resistance divided. |
| 10 | XFOK | I | Focus servo lock signal input L : Lock H : Unlock Use for lock detection of focus servo. |
| 11 | SINGLE | I | This information transmit to mode control by communication. L : Port high H : Port low Use for the signal mode |
| 12 | TBALDRV | O PWM | Output the tracking offset signal to PWM output, then use for auto tracking offset. 910 μsec period, tri-state control H, L, Z |
| 13 | XCD | O | LD/CD switch signal output L : CD H : LD |
| 14 | XPLAY | O | Signal output during spindle servo L : During servo H : During acceleration, brake and stop |
| 15 | SQOUT | I | Command data input from DSP Read out SUBQ |
| 16 | SO3 | O | Serial 3 data signals output Serial signals are common used and signal distinguishes from the latch signals (DVPLAT and TLAT). |
| 17 | SCK3 | O | Serial 3 clock signals output |
| 18 | SLDDRV | O PWM | Slider control signal output 5V=FWD, 0V=REV, 2.5V=STOP 910 μsec period, tri-state control H, L, Z |

| No. | Pin Name | I/O | Function |
|---|---|---|---|
| 19 | SI1 | I | Data input from the mode control IC |
| 20 | SO1 | O | Serial data output to the mode control IC |
| 21 | SCK1 | I/O | Clock for serial communication with the mode control IC<br>Becomes input mode without communicate with the mode control IC |
| 22 | TZC | I INT | Tracking error zero cross signal input Monitor this signal when searching track count in the miss clamp detection. |
| 23 | SBSY | I | Interrupt input for reading sub-code Q data from DSP |
| 24 | TILTDRV | I/O | LOAD/TILT control output<br>0.5V-Tray IN, OUT/Tilt DOWN, UP 2.5V-STOP Use for tilt servo that tilt drive is PWM output. |
| 25 | XANA | O | Digital/Analog audio switch signal output L : Analog H : Digital |
| 26 | XPBV | I | Playback vertical sync. signal input of LD/CDV L : During vertical sync. |
| 27 | CNVss | I | Ground for A/D conversion |
| 28 | XRESET | I | Reset signal input L : Reset H : Release reset Mode control is controlled. |
| 29 | XIN | I | 9MHz clock oscillation input |
| 30 | XOUT | O | 9MHz clock oscillation output |
| 31 | N.C. | O | Not used |
| 32 | GND | I | Ground |
| 33 | SW1 | I | Switch input for Loading/Tilt position detection |
| 34 | SW3 | | |
| 35 | SW2 | | |
| 36 | AV1GMOD | I | AV1 gijutu mode When this port set to H, unti-shock control will be effective by Address C-bit2 from the mode control. |
| 37 | FG | I | Spindle motor FG signal input 16 outputs per rotation Used after dividing by 2 in microprocessor |
| 38 | DATA | I | Input pin for Phillips code decoder with built in mechanism controller |
| 39 | XPBH | I | Playback H-SYNC input for Phillips code decoder |
| 40 | XPBV | I | Playback V-SYNC input for Phillips code decoder |
| 41 | TURNA | I | Turn switch input H : side A L : side B |
| 42 | XSURRND | O | Surround control H : OFF L : ON |
| 43 | XVCECAN | O | Voice cancel output H : OFF L : Cancel |
| 44 | MEMORY | I | Memory model discrimination H : Memory model L : Non-memory model |
| 45 | DOCINH | O | Control the clamp pulse and clamp killer by tri-state value |
| 46 | DETPOW | I | Use for power abnormal signal input port. L : Normal H : Abnormal |
| 47 | NRINH | O | Control output of the noise reduction switch signal output L : CX ON H : CX OFF |
| 48 | REFLOCK | I | Reference signal input from DVP L : Phase not aligned H : Phase aligned (Non-memory) |
| 49 | SQ1 | O | Analog audio switch signal output 1/L L : Squelch OFF H : Squelch ON |
| 50 | SQ2 | O | Analog audio switch signal output 2/R L : Squelch OFF H : Squelch ON |
| 51 | XCX | O | Analog audio CX noise reduction switch switch signal output L : CX ON H : CX OFF |
| 52 | XFTS | O | Serial command output switch signal output of DSP/others L : DSP H : others |
| 53 | PCTLVL | O | Signal output for the picture quality adjustment L : SHARP2 (strong) H : SHARP1 (weak) |
| 54 | DVPLAT | O | PD0234 serial latch signal output Latches at falling edge. |
| 55 | TBCLOCK | I | Spindle lock signal input L : Unlock H : Lock |
| 56 | TLATCH | O | DAC & digital filter PD2026B serial control latch signal output Latches at falling edge. |
| 57 | PCTCTL | O | Outline correction signal output L : Correction OFF H : Correction ON |
| 58 | DEEMPA | O | DSP deemphasis control L : OFF H : ON |
| 59 | DETAMP | I | Spindle over-current detection signal input L : Over current H : Normal |
| 60 | FSEQ | I | Subcode sync. conformity detection signal input L : Not conformity H : Conformity |
| 61 | THOLD | I | Track jump accelerating / decelerating signal input L : other H : accelerating / decelerating |
| 62 | WRQ | I | Subcode Q reading OK signal input L : NG H : OK This pin will be H when Subcode Q data passed by CRC check. |
| 63 | RWC | O | DSP read / write command signal output L : Read H : Write |
| 64 | SHAKE | I/O | Handshake signal for data communication with the mode control IC<br>This pin is the bilateral data line and each microprocessor control the Input / Output. |

## ■ LA7134M (MOTHER ASSY : IC400)

- VIDEO IC

- Block Diagram

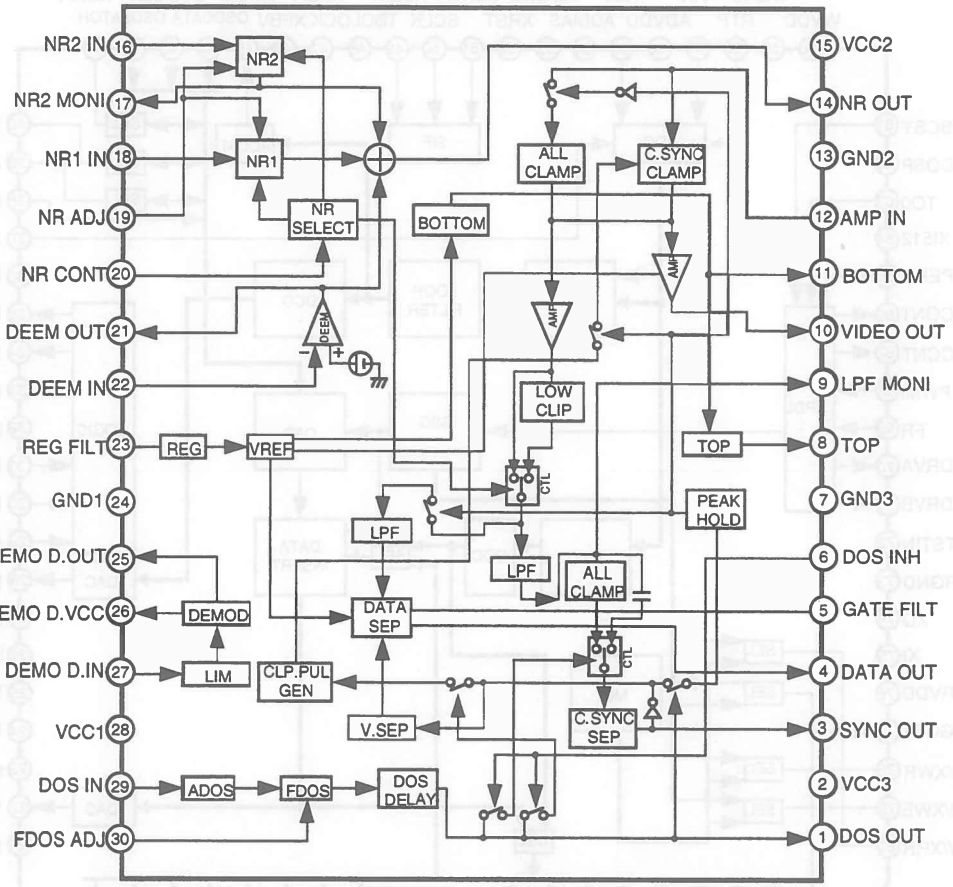

## ■ PD0234A (MOTHER ASSY : IC500)

### • DIGITAL VIDEO PROCESSOR

### • Block Diagram

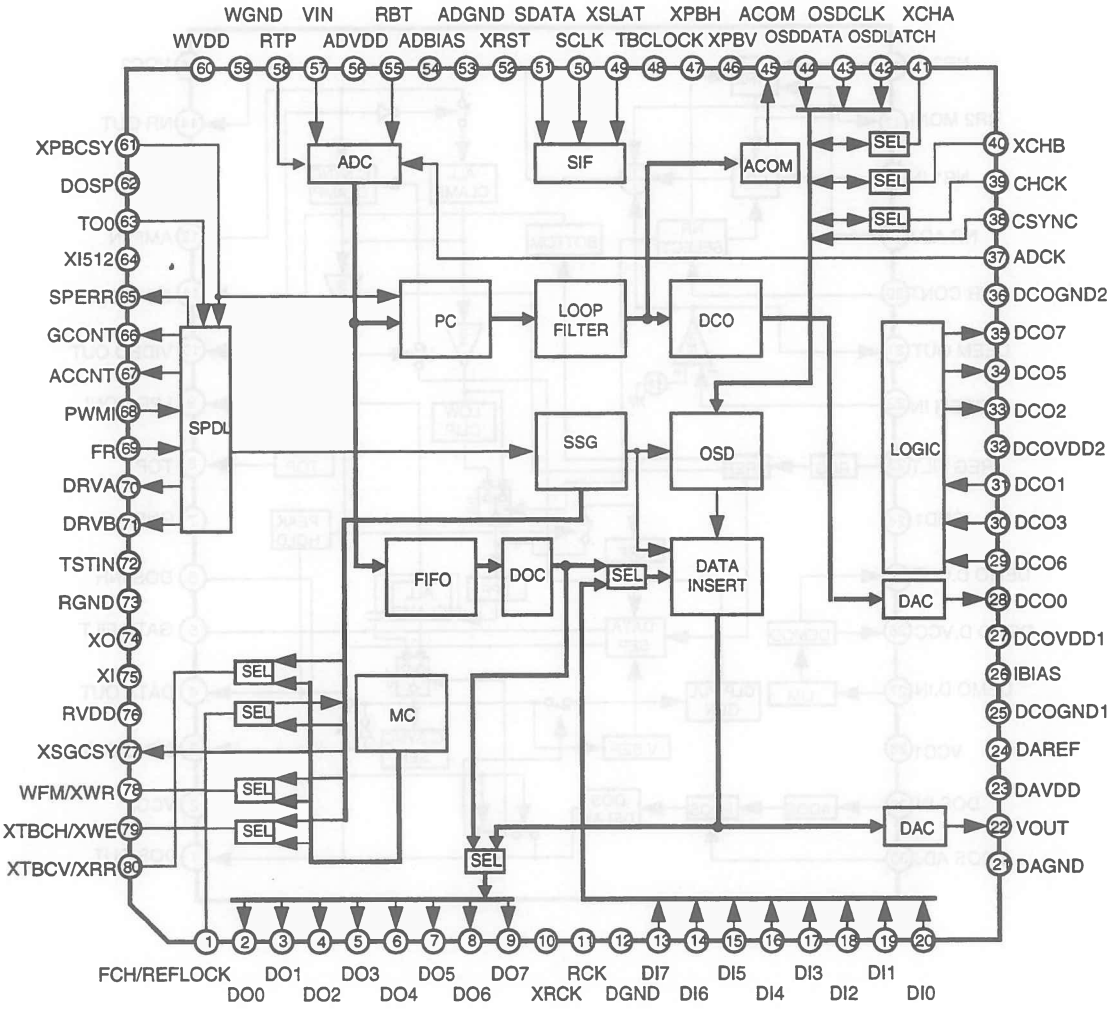

## • Pin Function

| No. | Pin Name | I/O | Function | |
|---|---|---|---|---|
| 1 | FCH | I | MEMSYS:1 | Switch the field of SSG by "H" |
| | REFLOCK | O | MEMSYS:0 | Outputs "H" when the phase difference of H/V sync. signal associated with the time-base-corrected video signal and those associated with SSG is small enough. |
| 2 | DO0 | O | Outputs the digital data of the time-base-corrected video signal for the memory system.<br>When using the internal memory controller (MEMSYS:1 & EXTMC:0), output for field memory and external output are common used.<br>Perform the data output setting with the serial command.<br>DO7 : MSB , DO0 : LSB | |
| 3 | DO1 | | | |
| 4 | DO2 | | | |
| 5 | DO3 | | | |
| 6 | DO4 | | | |
| 7 | DO5 | | | |
| 8 | DO6 | | | |
| 9 | DO7 | | | |
| 10 | XRCK | O | Inverting outputs the CLK of the reading system. When using the internal memory controller (MEMSYS:1 & EXTMC:0), phase is able to control with the serial command. | |
| 11 | RCK | O | Outputs the CLK of the reading system. When using the internal memory controller (MEMSYS:1 & EXTMC:0), phase is able to control with the serial command. | |
| 12 | DGND | — | Ground of digital system Connect to GND. | |
| 13 | DI7 | I | Digital video signal input<br>Outputs the field memory when using the internal memory controller (MEMSYS:1 & EXTMC:0) and inputs the external signal when using the external A/D.<br>DI7 : MSB , DI0 : LSB | |
| 14 | DI6 | | | |
| 15 | DI5 | | | |
| 16 | DI4 | | | |
| 17 | DI3 | | | |
| 18 | DI2 | | | |
| 19 | DI1 | | | |
| 20 | DI0 | | | |
| 21 | DAGND | — | Ground for DAC Connect to GND. | |
| 22 | VOUT | O | DAC output of the time-base-corrected video signal | |
| 23 | DAVDD | — | Power supply for DAC Connect to GND. | |
| 24 | DAREF | — | Reference pin for DAC Normally, decoupling to the DAGND through the 0.1 $\mu$F laminated ceramic capacitor. | |
| 25 | DCOGND1 | — | Ground for DCO Connect to GND. | |
| 26 | IBIAS | — | Current setting pin of the bias circuit Normally, connect to DAGND through the 10k$\Omega$ resistor. | |
| 27 | DCOVDD1 | — | Power supply for DCO Connect to +5V. | |
| 28 | DCO0 | O | DCO output pin Outputs a fsc in synchronization with the input video signal. This signal is multiplied by 4 to produce CLK of writing system. | |
| 29 | DCO6 | I | Waveform shaping input pin 6 Inputs a signal obtained by delaying the DCO5 output signal by 35 ns. (to be self biased) | |
| 30 | DCO3 | I | Waveform shaping input pin 3 Inputs a signal obtained by delaying the DCO5 output signal by 70 ns. (to be self biased) | |
| 31 | DCO1 | I | Waveform shaping input pin 1 Inputs a DCO0 output signal via the fsc BPF. (to be self biased) | |
| 32 | DCOVDD2 | — | Power supply for output multiplied by 4 Connect to +5V. | |
| 33 | DCO2 | O | Waveform shaping input pin 2 Outputs a signal obtained through waveform shaping of the DCO0 output signal. | |
| 34 | DCO5 | O | Waveform shaping input pin 5 Outputs a signal multiplied by 2. | |
| 35 | DCO7 | O | Waveform shaping input pin 7 Outputs a signal multiplied by 4. | |
| 36 | DCOGND2 | — | Ground for output multiplied by 4 Connect to GND. | |
| 37 | ADCK | I | CLK input for writing system Inputs DCO7 output signal via a 4fsc BPF. (to be self biased) | |
| 38 | CSYNC | I | Composite sync. input for character generator When using the OSD for single (EXTMIX:1), input the composite sync. for generating the character. | |
| 39 | CHCK | I | EXTMIX :1 | CLK input for character generator Inputs 2fsc. |
| | CHCK | O | EXTMIX :0 | CLK output for character generator Outputs 2fsc. |
| 40 | XCHB | O | EXTMIX :1 | Blanking signal output |
| | XCHB | I | EXTMIX :0 | Blanking signal input Inputs "L" when inserting the blanking signal. |
| 41 | XCHA | O | EXTMIX :1 | Character signal output |
| | XCHA | I | EXTMIX :0 | Character signal input Inputs "L" when inserting the character signal. |
| 42 | OSDLATCH | I | Latch input for OSD Serial transmission of the OSD control data is able to accept by this pin set to "L". | |
| 43 | OSDCLK | I | CLK input for reading the OSD data | |

| No. | Pin Name | I/O | Function |
|---|---|---|---|
| 44 | OSDDATA | I | Control data input for OSD Read the data in synchronization with CLK which input to OSDCLK pin. |
| 45 | ACOM | O | Jitter correction signal output for analog audio Use for cancelling the jitter element of analog audio. |
| 46 | XPBV | O | PB system V sync. output Outputs the signal obtained by separating V sync. signal from the signal at pin 61 (XPBCSY) with negative logic. |
| 47 | XPBH | O | PB system H sync. output Outputs the signal obtained by separating H sync. signal from the signal at pin 61 (XPBCSY) with negative logic. |
| 48 | TBCLOCK | O | PLL lock detection signal output Outputs "H" when the spindle loop and the TBC loop are locked. |
| 49 | XSLAT | I | Serial interface latch input Gives the latch timing for data applied to the serial interface. Latches at "L". |
| 50 | SCLK | I | CLK input for the serial interface SDATA value will be read at the rising edge. |
| 51 | SDATA | I | Data input pin for the serial interface |
| 52 | XRST | I | System reset input Input for initializing the internal register of IC with negative logic. |
| 53 | ADGND | — | Ground for ADC Connect to GND. |
| 54 | ADBIAS | — | NC or connect to ADGND. |
| 55 | RBT | I | ADC bottom reference input Gives the bottom reference voltage of ADC. |
| 56 | ADVDD | — | Power supply for ADC Connect to +5V. |
| 57 | VIN | I | ADC input Inputs the composite video signal. |
| 58 | RTP | I | ADC top reference input Gives the top reference voltage of ADC. |
| 59 | WGND | — | Ground for writing system Connect to GND. |
| 60 | WVDD | — | Power supply for writing system Connect to +5V. |
| 61 | XPBCSY | I | Inputs the composite sync. signal of PB system with negative logic. |
| 62 | DOSP | I | Inputs the dropout detection pulse with positive logic. |
| 63 | TO0 | I | Inputs the tracking-servo open signal with positive logic. |
| 64 | XI512 | O | Outputs a 1/512th division of the CLK of reading system. |
| 65 | SPERR | O | PFD error output of the spindle error It outputs the result of comparison (PFD) between PBH and reading system H in tristate. |
| 66 | GCONT | O | Spindle gain control output Outputs a PWM signal according to the serial-command specified value. |
| 67 | ACCNT | O | Acceleration control output Tristate output of the acceleration/deceleration signal, which depends either on the forced acceleration/deceleration signal, the error detection by serial command or error detection by H sync. signal. |
| 68 | PWMI | I | Spindle error PWM input Inputs a signal obtained through the voltage comparison between the spindle error signal which has passed through a loop filter and the chopping wave. |
| 69 | FR | I | Spindle error direction element input Inputs a signal obtained through the voltage comparison between the spindle error which has passed through a loop filter and the destination voltage. |
| 70 | DRVA | O | Output for driving the spindle motor driver<br>It is applicable to either a brush or brushless motor, selection of which is by a serial command. |
| 71 | DRVB | | |
| 72 | TSTIN | I | Input for IC test Fixed to "L". |
| 73 | RGND | — | Ground for reference system Connect to GND. |
| 74 | XO | O | Connect the X'tal. Connect the 8fsc when using the internal memory controller (MEMSYS:1 & EXTMC:0) and the 4fsc is at others. |
| 75 | XI | I | |
| 76 | RVDD | — | Power supply for reference system Connect to +5V. |
| 77 | XSGCSY | O | Internal SSG composite sync. output Outputs the composite sync. signal of the internal SSG with negative logic. It can be delayed by a serial command with a specified delay duration. |
| 78 | WFM | O | MEMSYS:1 & EXTMC:1 — Field monitor output of write system Outputs "H" for the odd field. |
| | XWR | O | MEMSYS:1 & EXTMC:0 — Write reset output Outputs a signal to initializing the writing address of field memory. Outputs "L" pulse for 1CLK on every field of write system. Connect to XWRST input of field memory. |
| 79 | XTBCH | O | MEMSYS:1 & EXTMC:1 — TBC H sync. output Outputs the time-base-corrected H sync. signal with negative logic. |
| | XWE | O | MEMSYS:1 & EXTMC:0 — Write enable output Control the writing operation of field memory. "L" for enable and "H" for disenable. Connect to XWE input of field memory. |
| 80 | XTBCV | O | MEMSYS:1 & EXTMC:1 — TBC V sync output Outputs the time-base-correcter V sync. signal with negative logic. |
| | XRR | O | MEMSYS:1 & EXTMC:0 — Read reset output Outputs a signal to initializing the reading address of field memory. Outputs "L" pulse for 1CLK on every each field of read system. Connect to XRRST input of field memory. |

# ■LC78620E (MOTHER ASSY : IC802)

## • SERVO CONTROLER & EFM DEMODULATOR

### • Block Diagram

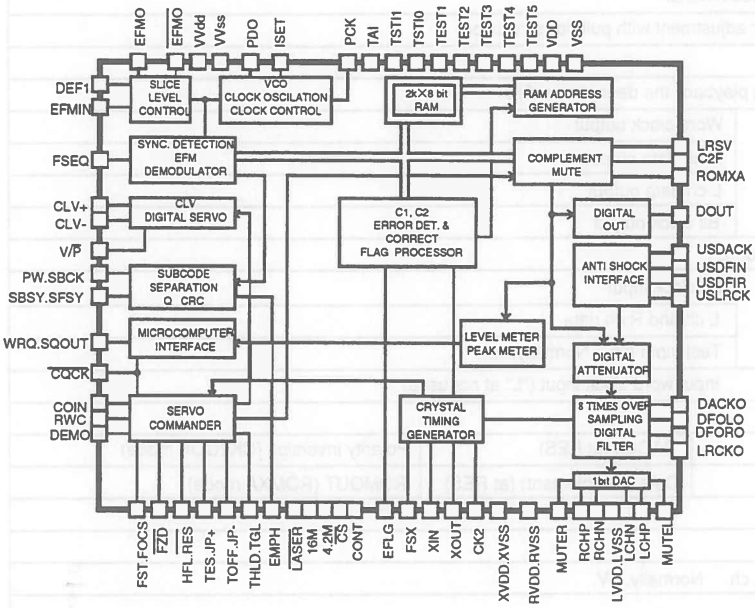


### • Pin Arrangement (Top View)

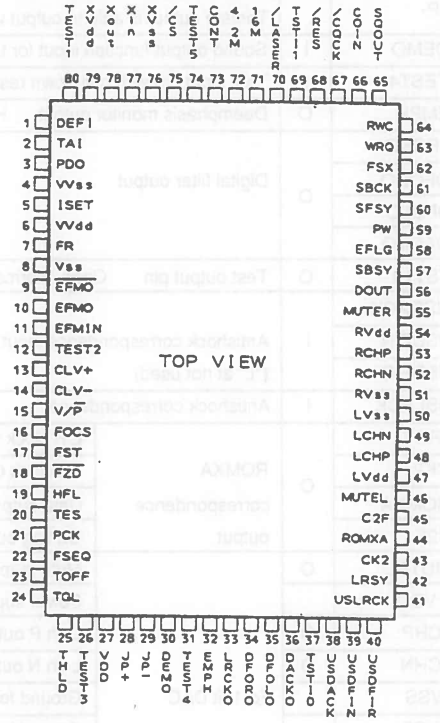


### • Pin Function

| No. | Pin Name | I/O | Function | |
|---|---|---|---|---|
| 1 | DE-FI | I | Defect detection signal (DEF) input pin ("L" at not used) | |
| 2 | TAI | I | For PLL | Test input pin with pull-down resistor |
| 3 | PDO | O | | Phase comparison output for controlling the external VCO |
| 4 | V Vss | — | | Power supply for PLL and internal VCO Normally, 0V. |
| 5 | ISET | AI | | Connect a resistor for current adjustment of PDO output |
| 6 | V VDD | — | | Ground for internal VOO Normally, 5V. |
| 7 | FR | AI | | For VCO frequency range adjustment |
| 8 | Vss | — | Ground for digital system Normally, 0V. | |
| 9 | EFMO | O | For slice level control | EFM signal inversion output |
| 10 | EFMO | O | | EFM signal output |
| 11 | EFMIN | I | | EFM signal input |
| 12 | TEST2 | I | Test input pin with pull-down resistor | |
| 13 | CLV+ | O | Output pin for controlling the spindle servo Acceleration for CLV+ is "H" and Deceleration for CLV- is "H". | |
| 14 | CLV- | O | Tristate output is able to output with command | |
| 15 | V/P | O | Automatic switching monitor output of rough servo/phase control H : Rough servo , L : Phase control mode | |
| 16 | FOCS | O | Output pin for focus servo ON/OFF Focus servo ON for "L" | |
| 17 | FST | O | Focus start pulse output (open drain output) | |
| 18 | F2D | I | Focus error zerocross signal input ("L" at not used) | |
| 19 | HFL | I | Track detection signal input (schmitt input) | |
| 20 | TES | I | Tracking error signal input (schmitt input) | |
| 21 | PCK | O | Clock monitor output for EFM data playback (4.3218MHz at phase clock) | |
| 22 | FSEQ | O | Sync. signal detection output Becomes "H" when the sync. signals between the detected sync. signal from EFM signal and internal generated sync. signal are aligned. | |
| 23 | TOFF | O | Tracking OFF output | |
| 24 | TGL | O | Output pin for output tracking gain switch Gain up for "L". | |
| 25 | THLD | O | Tracking hold output | |
| 26 | TEST3 | I | Test input pin with pull-down resistor | |

| No. | Pin Name | I/O | Function |
|---|---|---|---|
| 27 | VDD | | Power supply for digital system Normally, 5V. |
| 28 | JP+ | O | Output pin for track jump When JP+ is "H" , Acceleration in the outer direction jump or Deceleration in the inner direction jump. When JP- is "H" : Acceleration in the inner direction jump or deceleration in the outer direction jump. Tristate output is able to output with the bcommand. |
| 29 | JP- | | |
| 30 | DEMO | I | Sound output function input for the player adjustment with pull-down resistor |
| 31 | TEST4 | I | Test input pin with pull-down resistor |
| 32 | EMPH | O | Deemphasis monitor output H : during playback the deenphasis disc |
| 33 | LRCKO | O | Digital filter output — Word clock output |
| 34 | DFORO | | Digital filter output — R ch data output |
| 35 | DFOLO | | Digital filter output — L ch data output |
| 36 | DACKO | | Digital filter output — Bit clock output |
| 37 | TST10 | O | Test output pin Open (Normally, output "L") |
| 38 | USDACK | I | Antishock correspondence input ("L" at not used) — Bit clock input |
| 39 | USDFIN | | Antishock correspondence input ("L" at not used) — L ch and R ch data |
| 40 | USDFIR | | Antishock correspondence input ("L" at not used) — Test input pin Normally, "L". |
| 41 | USLRCK | I | Antishock correspondence Input word clock input ("L" at not used) |
| 42 | LRSY | O | ROMXA correspondence output — L/R clock output |
| 43 | CK2 | | ROMXA correspondence output — Bit clock output / DACLK (at RES) / Polarity inversion (CK2COK mode) |
| 44 | ROMXA | | ROMXA correspondence output — Data output / Data (complement) (at RES) / ROMOUT (ROMXA mode) |
| 45 | C2F | | ROMXA correspondence output — C2 flag output |
| 46 | MUTEL | O | For1bit DAC — Mute output |
| 47 | L VDD | | For1bit DAC — Power supply for L ch Normally, 5V. |
| 48 | LCHP | O | For1bit DAC — L ch P output |
| 49 | LCHN | O | For1bit DAC — L ch N output |
| 50 | LVSS | | For1bit DAC — Ground for L ch Normally, 0V. |
| 51 | RVSS | | For1bit DAC — Ground for R ch Normally, 0V. |
| 52 | RCHN | O | For1bit DAC — R ch N output |
| 53 | RCHP | O | For1bit DAC — R ch P output |
| 54 | RVDD | | For1bit DAC — Power supply for R ch Normally, 5V. |
| 55 | MUTER | O | For1bit DAC — Mute output |
| 56 | DOUT | O | Digital OUT output |
| 57 | SBSY | O | Perion signal output of subcode block |
| 58 | EFLG | O | Correction monitor output of C1, C2, single and double |
| 59 | PW | O | Subcode P, Q, R, S, T, U and W output |
| 60 | SFSY | O | Period signal output of subcode frame Rise down when the subcode is stndbyed. |
| 61 | SBCK | I | Subcode reading clock input (schmitt input) |
| 62 | FSX | O | 7.35kHz sync. signal output which is divided the frequency from the crystal resonator. |
| 63 | WRQ | O | Standby output of subcode Q output |
| 64 | RWC | I | Read / Write control input |
| 65 | SQOUT | O | Subcode Q output |
| 66 | COIN | I | Command input from the microcomputer |
| 67 | CQCK | I | Command input take in clock or subcode take out clock input from SQOUT (schmitt input) |
| 68 | RES | I | Chip reset input Once turn to "L" at the power ON |
| 69 | TST11 | O | Test input pin Open (Normally, output "L") |
| 70 | LASER | O | Laser ON/OFF output Control with the serial data command from the microcomputer |
| 71 | 16M | O | 16.9344MHz output However, output 33.8688MHz in the fourfold speed playback mode. |
| 72 | 4.2M | O | 4.2336MHz output |
| 73 | CONT | O | Auxiliary output Control with the serial data command from the microcomputer. |
| 74 | TEST5 | I | Test input pin with pull-down resistor |
| 75 | CS | I | Chip select input with pull-down resistor |
| 76 | XVSS | | Ground for the crystal resonator Normally, 0V. |
| 77 | XIN | I | Connect the 16.9344MHz crystal resonator. |
| 78 | XOUT | O | Connect the 33.8688MHz crystal resonator in the fourfold speed playback system. |
| 79 | XVDD | | Power supply for the crystal resonator Normally, 5V. |
| 80 | TEST1 | I | Test input pin with pull-down resistor |

## 7.1.2 DISPLAY

### ■ VAW1041 (FLKY ASSY : V101)

- **FL TUBE**

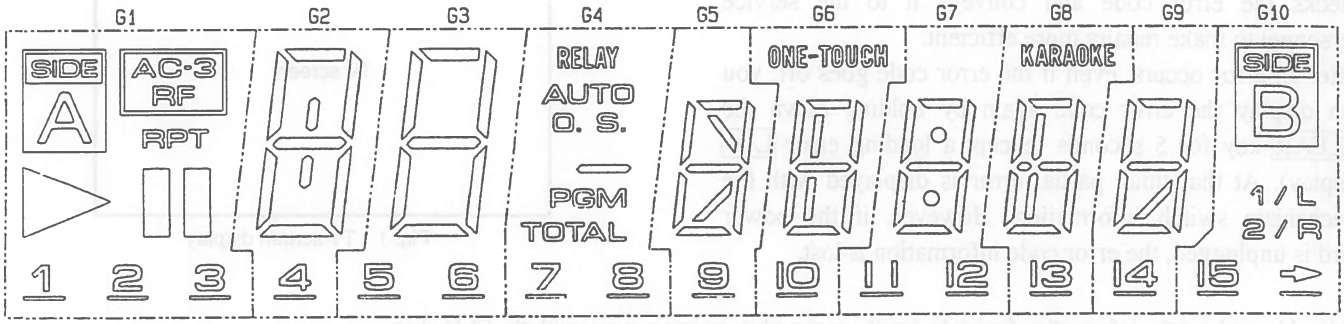


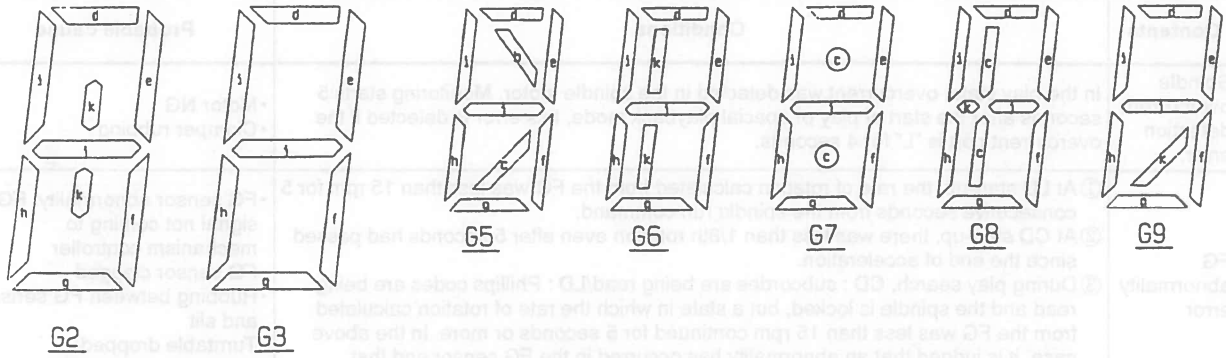


- **ANODE GRID ASSIGNMENT & PIN ASSIGNMENT**

| | G1 | G2 | G3 | G4 | G5 | G6 | G7 | G8 | G9 | G10 |
|---|---|---|---|---|---|---|---|---|---|---|
| P1 | 1 | 4 | 5 | 7 | 9 | 10 | 11 | 13 | 14 | 15 |
| P2 | 2 | | 6 | 8 | b | ONE-TOUCH | 12 | KARAOKE | | ⇨ |
| P3 | 3 | | | | c | | : | c | | |
| P4 | SIDE A | d | d | RELAY | d | d | d | d | d | SIDE B |
| P5 | ▷ | e | e | AUTO | e | e | e | e | e | 1/L |
| P6 | II | f | f | O. | f | f | f | f | f | 2/R |
| P7 | RPT | g | g | S. | g | g | g | g | g | |
| P8 | AC-3 RF | h | h | - | h | h | h | h | h | |
| P9 | | i | i | PGM | i | i | i | i | i | |
| P10 | | j | j | TOTAL | j | j | j | j | j | |
| P11 | | k | | | | k | | k | k | |

- **PIN ASSIGNMENT**

| Pin No. | 1 | 2 | 3 | 4 | 5 | 6 | 7 | 8 | 9 | 10 | 11 | 12 | 13 | 14 | 15 | 16 | 17 |
|---|---|---|---|---|---|---|---|---|---|---|---|---|---|---|---|---|---|
| Assignment | F | F | NP | NL | NL | NL | NL | G1 | G2 | G3 | G4 | G5 | G6 | G7 | G8 | G9 | G10 |

| Pin No. | 18 | 19 | 20 | 21 | 22 | 23 | 24 | 25 | 26 | 27 | 28 | 29 | 30 | 31 | 32 | 33 | 34 |
|---|---|---|---|---|---|---|---|---|---|---|---|---|---|---|---|---|---|
| Assignment | P1 | P2 | P3 | P4 | P5 | P6 | P7 | P8 | P9 | P10 | P11 | NL | NL | NL | NP | F | F |

F:Filament G1~G10:Grid P1~P11:Anode NP:No pin NL:No Lead

# 7.2 DIAGNOSIS

## 7.2.1 SELF-DIAGNOSTIC FUNCTIONS

### (1) SELF-DIAGNOSTIC FUNCTIONS

The self-diagnostic functions automatically display an error code on the TV screen and front panel fluorescent display section when there is an error. The customer checks the error code and conveys it to the service personnel to make repairs more efficient.

After an error occurs, even if the error code goes off, you can display the error code again by holding down the CLEAR key for 5 seconds (except a loading error L ∗ display). At that time, partial error is displayed with the mechanism switch information. However, if the power cord is unplugged, the error code information is lost.

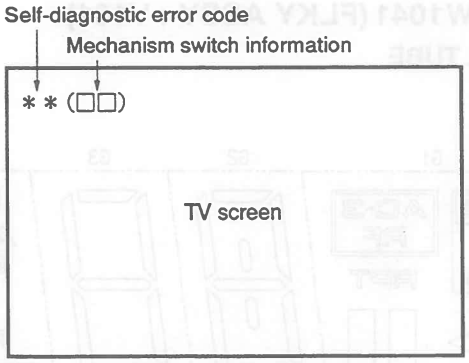


Fig. 1 TV screen display

This table explains the information for analyzing the cause when an error occurs with the CLD player.

| Self-diagnostic error code | Contents | Conditions | Probable cause |
|---|---|---|---|
| H0 | Spindle overcurrent detection error. | In the play state, overcurrent was detected in the spindle motor. Monitoring starts 5 seconds after the start of play or special playback mode, this error is detected if the overcurrent port is "L" for 4 seconds. | • Motor NG<br>• Clamper rubbing |
| U0 | FG abnormality error | ① At LD start-up, the rate of rotation calculated from the FG was less than 15 rpm for 5 consecutive seconds from the spindle run command.<br>② At CD start-up, there was less than 1/8th rotation even after 5 seconds had passed since the end of acceleration.<br>③ During play search, CD : subcordes are being read/LD : Phillips codes are being read and the spindle is locked, but a state in which the rate of rotation calculated from the FG was less than 15 rpm continued for 5 seconds or more. In the above case, it is judged that an abnormality has occurred in the FG sensor and that accurate rotation rate calculation has become impossible. | • FG sensor abnormality, FG signal not coming to mechanism controller<br>• FG sensor clogged<br>• Rubbing between FG sensor and slit<br>• Turntable dropped<br>• FG slit deposition NG |
| H1 | Partial short error | ① At LD start-up, the speed did not reach 1200 rpm within a certain time (12 seconds) after the spindle run command.<br>② At CD start-up, a certain speed (313 rpm) was not reached within 6 seconds from the end of spindle acceleration. | • Spindle motor NG<br>• Commutator NG<br>• Bearing too tight<br>• Power supply NG |
| H2<br>A0 | Power supply abnormality error | − 5V power supply abnormality detected.<br>The power supply abnormality port is constantly monitored and if its signal stays high for about 1 second consecutively, the power supply is judged to be abnormal. | • − 5V not fed from POWER SUPPLY assy<br>• Parts shorted |
| L ∗ | Loading error | ① When loading operation goes over time (approx. 10 sec.).<br>② When assist at disc sense entry ends and is not tilt neutral.<br>③ When assist at set up entry ends and is not tilt neutral. | • Tilt switch 1, 2, 3 abnormal, so tilt/loading state not read in correctly<br>• Tilt/loading mechanism mechanically locked<br>• Drive IC NG<br>• Power supply NG |
| E ∗ | Slider error | During slider movement, a time over-run occurred (track count search 20 seconds, mandatory movement 10 seconds) | • Slider ceased being able to run<br>• The slider mechanism is mechanically locked and can no longer move to its target.<br>• Slider position switch NG<br>• Flexible cable pulled out<br>• Drive IC NG<br>• Power supply abnormal |
| U1 | Miss clamp error | ① During LD setup, after 1/8th rotation, the track count during 1/8 rotation exeeded 511.<br>② During start-up, the focus was lost once and refocusting was attempted, but the focus could not be locked.<br>③ Two FG pulses did not come within 800 ms from from the start of LD start-up.<br>④ The disc clamp operation did not end within 5 seconds. | • Disc sandwiched<br>• Disc shifted<br>• Spindle motor NG<br>• Disc scratched or dirty defocused during start-up<br>• Two discs loaded<br>• PU actuator NG<br>• Tilt sensor NG<br>• Tilt neutral NG (tilt base NG) |

| Self-diagnostic error code | Contents | Conditions | Probable cause |
|---|---|---|---|
| P * | Spindle error | ①During TOC reading with an LD, the spindle servo was not locked within 60 seconds from the start of the spindle run.<br>②When CAV/CLV determination is not finished within 60 seconds from spindle servo lock.<br>③The codes could not be read for 10 – 15 seconds consecutively for an LD or 7 – 10 seconds for a CD/CDV and the spindle servo was not locked.<br>④The speed exceeded 2100 rpm during LD start up. | P0 :•PH code, SUB-Q code can not be read<br>•VCO, PLL offset out of adjustment<br>•Disc defect<br>P5:•PAL disc, mirror disc, etc. PLAY<br>•No RF<br>P6:•Spindle servo does not lock<br>•Spindle motor NG |
| F * | Focus error | ①"In the "no disc" state, a setup command was received from the mode controller.<br>②When LD is out of focus when slider is moved to starting position during set up. In case of CD/CDV is NG even after three focus tries.<br>③During start-up, the maximum slider servo duty continued for 3 loops or more. | F5 :•CD, LD on top of each other<br>•LD scratched or dirty defocused during slider movement<br>•Disc NG<br>•Slider position switch NG<br>F6 :•Inner edge of disc scratched or dirty<br>•Slider ran into inner edge mechanical stopper |

* Besides the above errors, there is the "U2" communications error (the mode controller could not communicate normally with the mechanism controller)
The probable cause is a defective mechanism controller, disconnected cable, etc..
* Mechanism mode contents (meanig of * for L * etc.)

0 : Play
1 : Open
2 : Standby
3 : Clamp
4 : Disc sense
5 : Setup (rotation start)
6 : TOC read
7 : Play
8 : Search
9 : Side A → Side B
A : Side B → Side A

## (2) FORMAT OF THE MECHANISM SWITCH INFORMATION WHICH IS TRANSMITTED TO THE MODE CONTROL IN THE ERROR OCCURRENCE

### • Mechanism switch information ( 1 7 )

Example: 1 7 — Hexadecimal number system

Mechanism control → Mode control
Communication byte address 5 (COMBUF5)
(Mode control displays this value as it is.)

| Hexadecimal number system | Binary number system |
|---|---|
| 0 | 0 0 0 0 |
| 1 | 0 0 0 1 |
| 2 | 0 0 1 0 |
| 3 | 0 0 1 1 |
| 4 | 0 1 0 0 |
| 5 | 0 1 0 1 |
| 6 | 0 1 1 0 |
| 7 | 0 1 1 1 |
| 8 | 1 0 0 0 |
| 9 | 1 0 0 1 |
| A | 1 0 1 0 |
| B | 1 0 1 1 |
| C | 1 1 0 0 |
| D | 1 1 0 1 |
| E | 1 1 1 0 |
| F | 1 1 1 1 |

Example

Hexadecimal number system — Example 1 — Example 7

Binary number system

| 0 | 0 | 0 | 1 | 0 | 1 | 1 | 1 |
|---|---|---|---|---|---|---|---|
| bit 7 | bit 6 | bit 5 | bit 4 | bit 3 | bit 2 | bit 1 | bit 0 |
| TURN A | O Not used | LTSW1 | LTSW2 | LTSW3 | SLDP1 | SLDP2 | SLDP3 |

| TURNA | Slider position |
|---|---|
| 0 | Side B |
| 1 | Side A |

Example of 1 7 is indicated as follows.

Slider : Side B
Tilt : Tilt +
Position : B-INSIDE

| LTSW 1 | 2 | 3 | Loading/tilt position |
|---|---|---|---|
| 0 | 1 | 1 | Open (Tray open state) |
| 0 | 0 | 1 | Loading (During move the tray horizontally) |
| 1 | 0 | 1 | Standby (Tray close & spindle down state) |
| 1 | 0 | 0 | Clamp (Durring spindle up or down) |
| 0 | 0 | 0 | Tilt – (Clamp state) |
| 0 | 1 | 0 | Tilt + (Clamp state) |
| 1 | 1 | 0 | Tilt limit (Clamp state) |

| SLDP 1 | 2 | 3 | Slider position |
|---|---|---|---|
| 1 | 0 | 0 | CD active position |
| 1 | 0 | 1 | CDV active position |
| 1 | 1 | 0 | LD active position |
| 0 | 1 | 1 | CD inside position |
| 1 | 1 | 1 | Side B inside position |

## 7.2.2 AGEING MODE (エージングモード)

### AGEING MODE: ON

•Note for KARAOKE model : Set the SINGLE PLAY (一曲停止) mode to OFF.

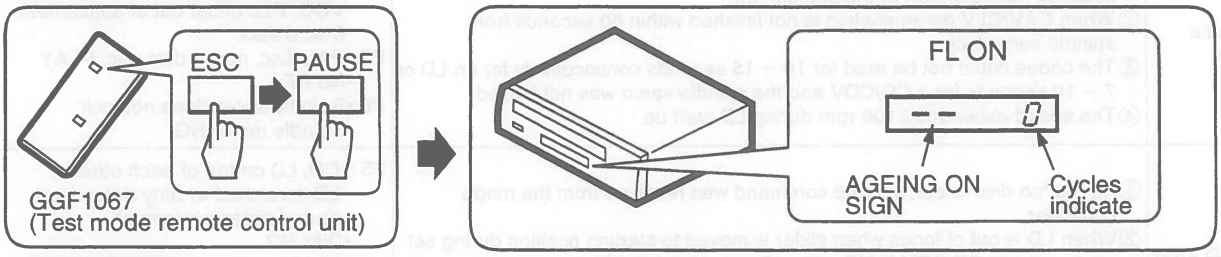


### AGEING

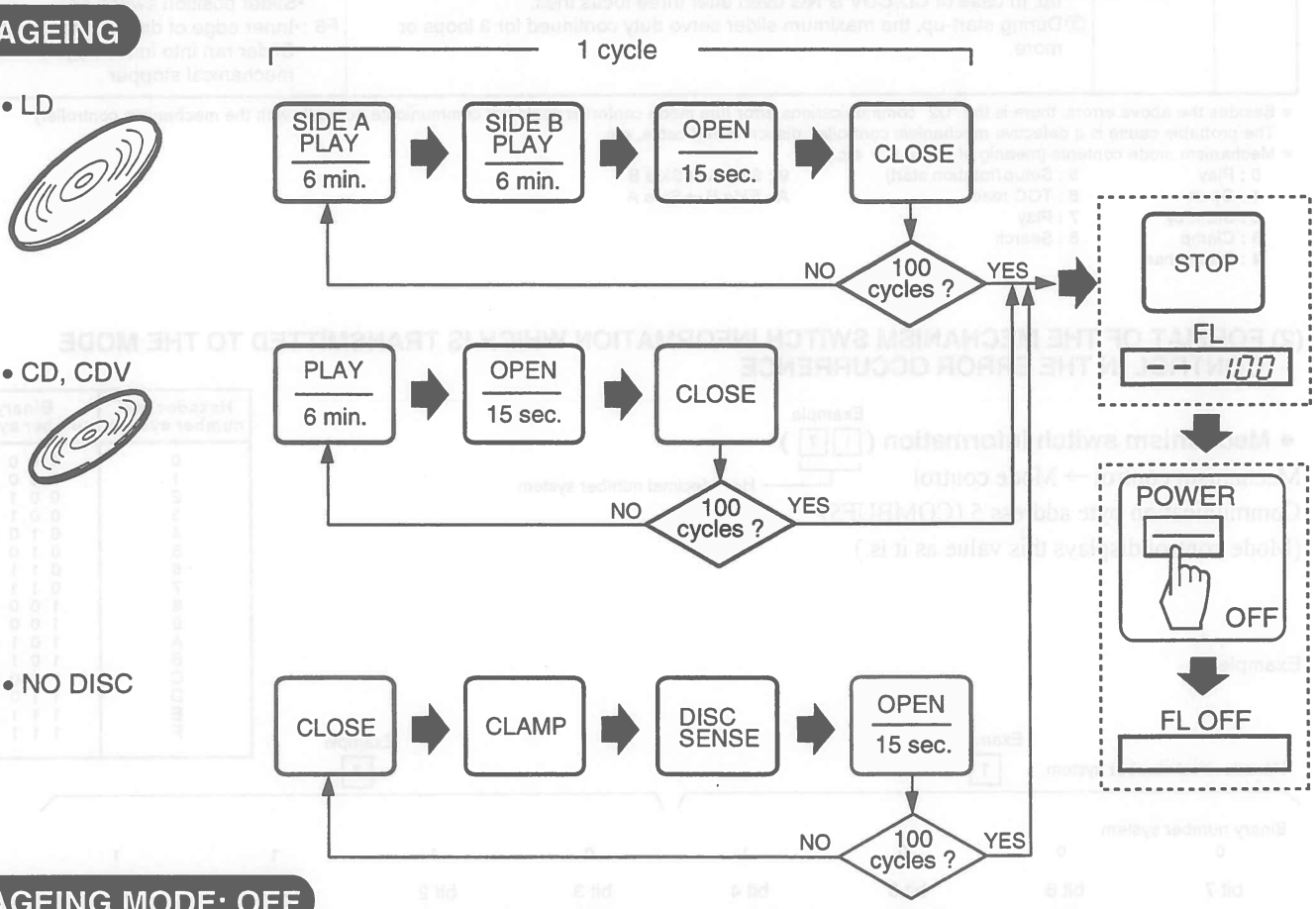


### AGEING MODE: OFF

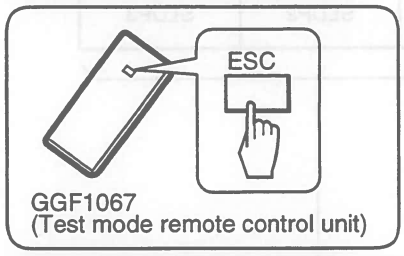


### ERROR OCCURRED

ERROR OCCURED : エラー発生

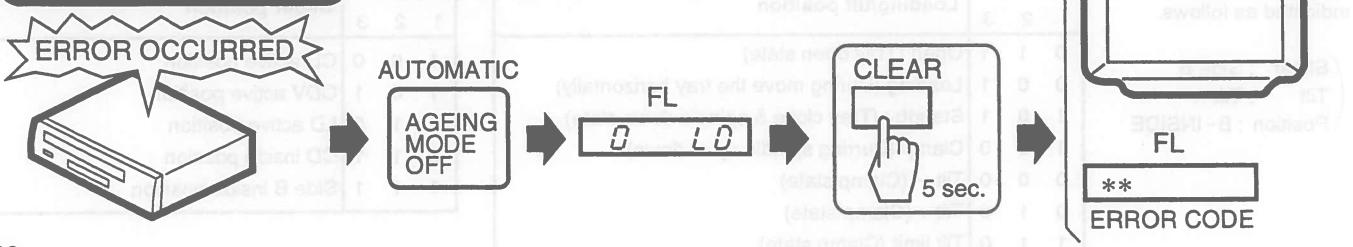

## 7.2.3 DISASSEMBLY/ASSEMBLY（分解/組立の手順）

### (1) DISC TRAY

- Disassembly : ①→②→③→④→⑤
- Assembly : ⑤→①

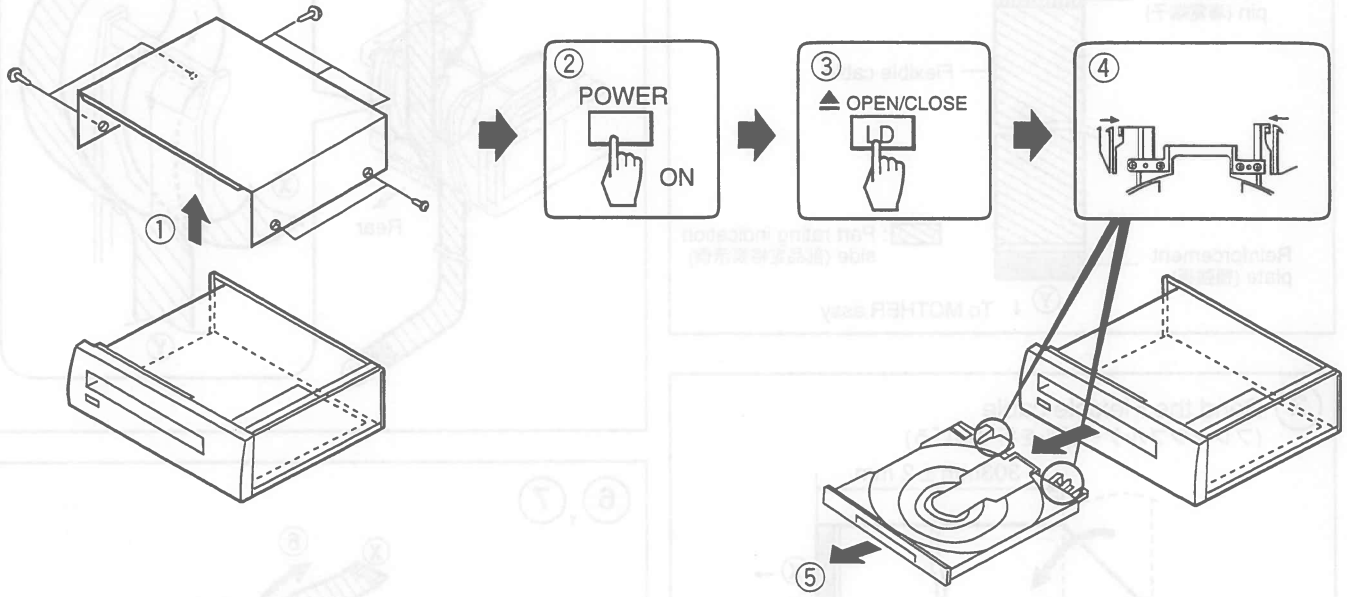


### (2) MOTHER ASSY

- Disassembly : ①→②→③→④→⑤→⑥
- Assembly : ⑥→⑤→④→③→②→①

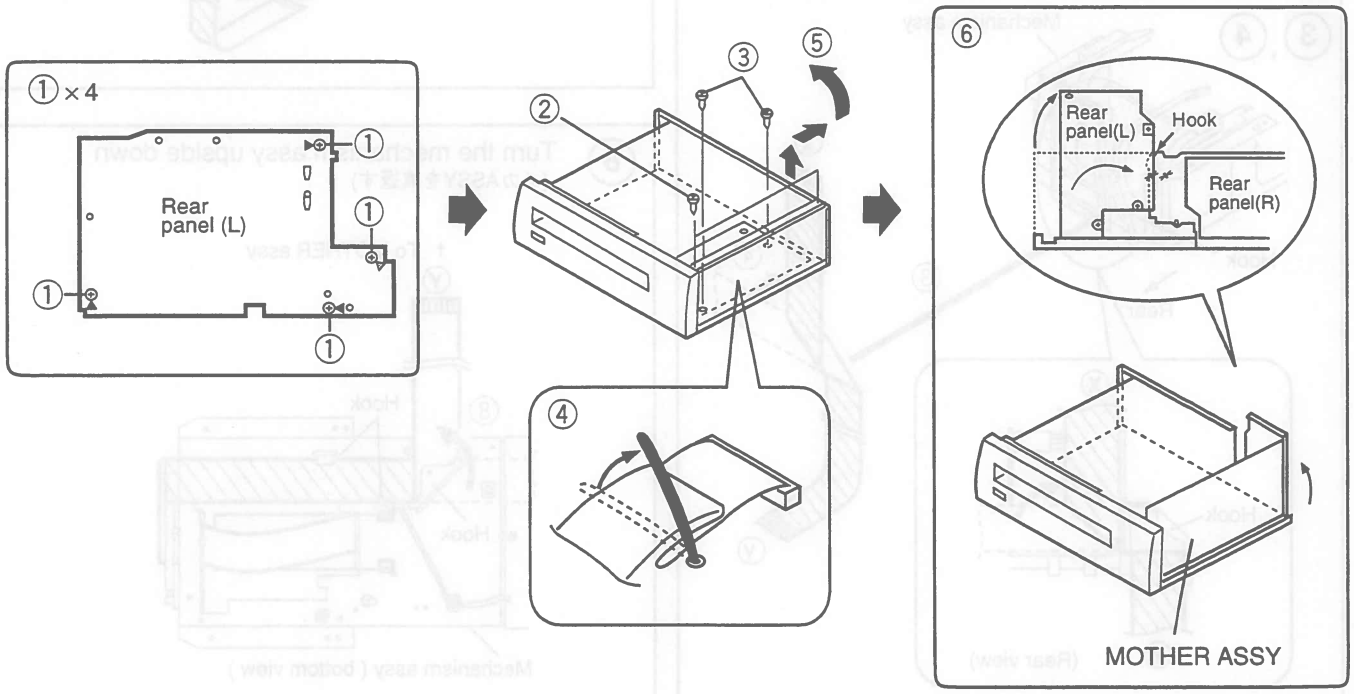

## (3) HOW TO INSTALL THE FLEXIBLE CABLE FOR CARRIAGE ASSY
（キャリッジASSY用フレキシブルケーブルの取付方法）

① New Flexible cable

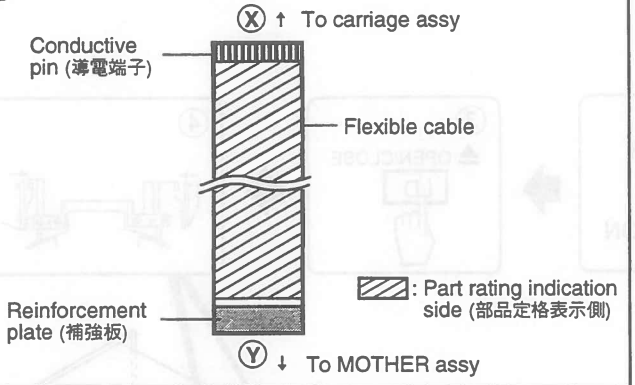


② Bend the Flexible cable
(フレキシブルケーブルを折り曲げる)

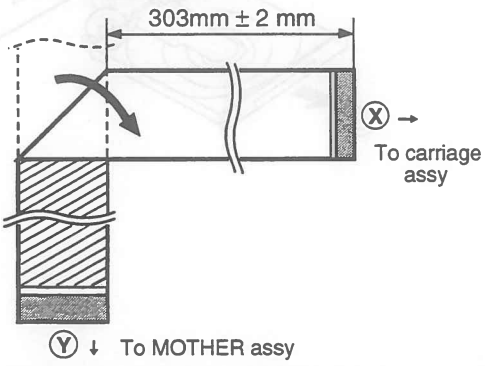


③, ④

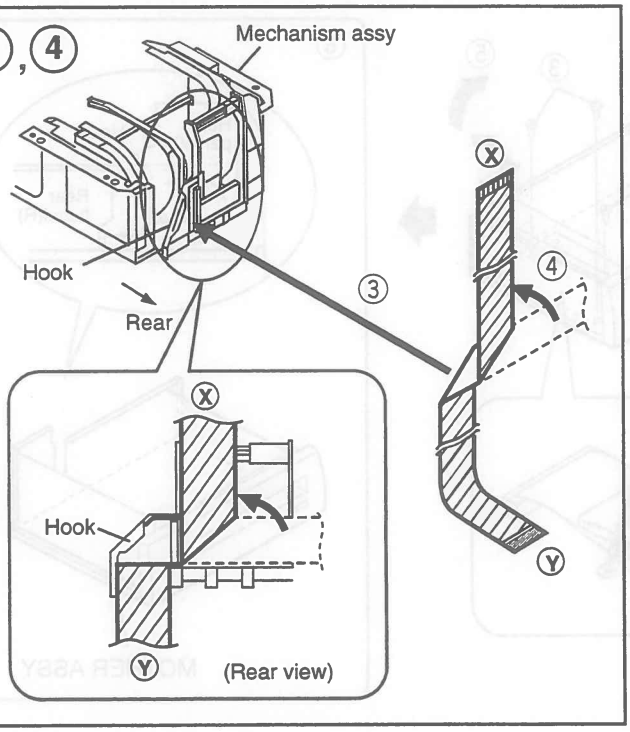


⑤

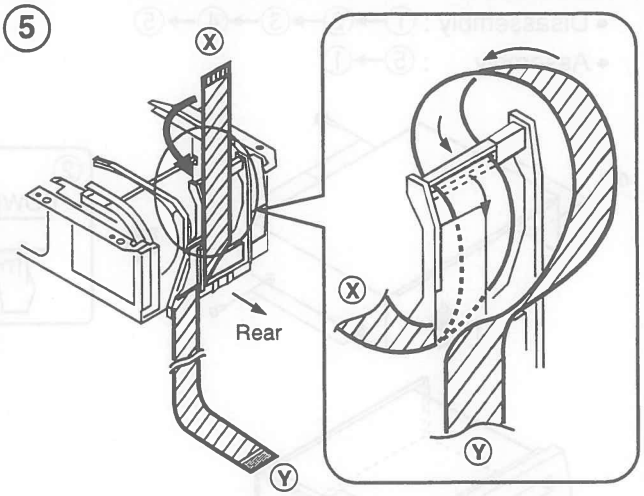


⑥, ⑦

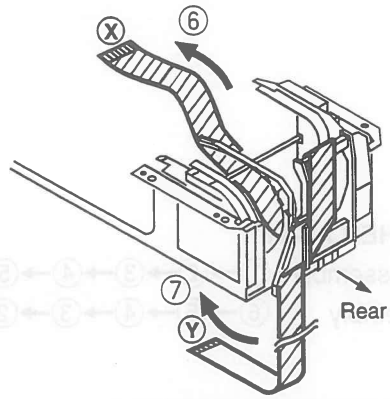


⑧ Turn the mechanism assy upside down
(メカASSYを裏返す)

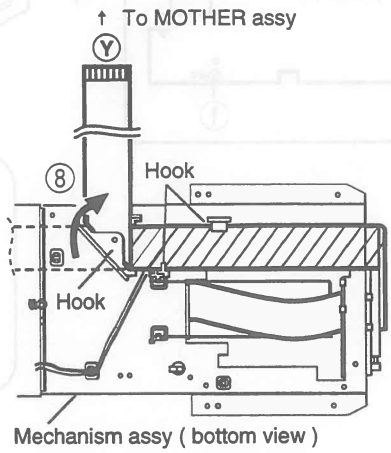

**9**

Caution:
Don't connect the ⓧ side of flexible cable to the carriage assy in this step. (この段階では フレキシブルケーブルのⓧ側をキャッリジASSYへ接続しない)
If connect it, the laser diode might be damaged by the static electricity. (もし接続すると、静電気によりレーザーダイオードが破壊される場合があります)

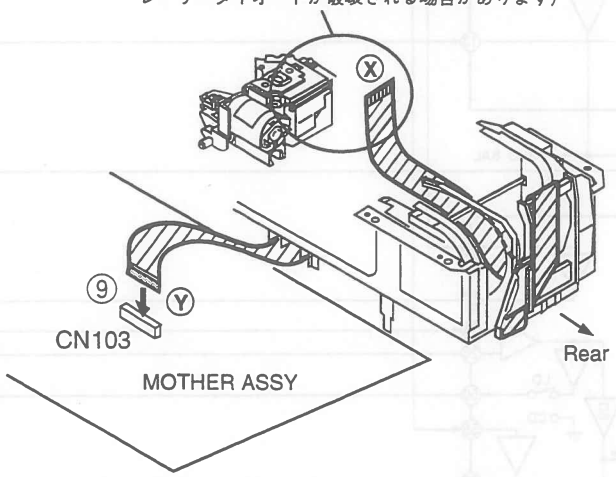


**11, 12**

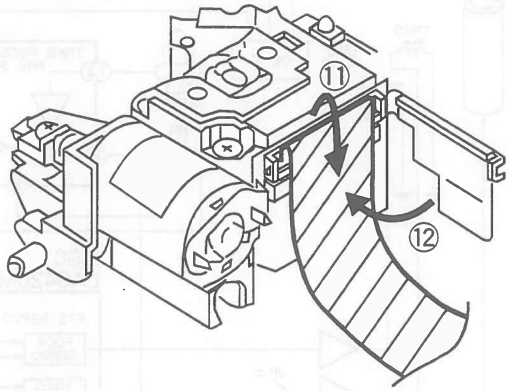


**10**

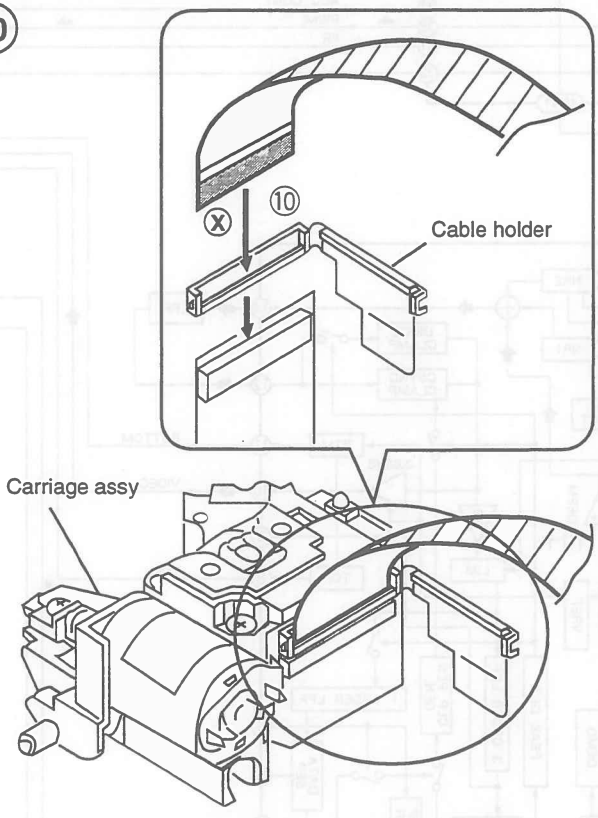


**13** Finish (終了)

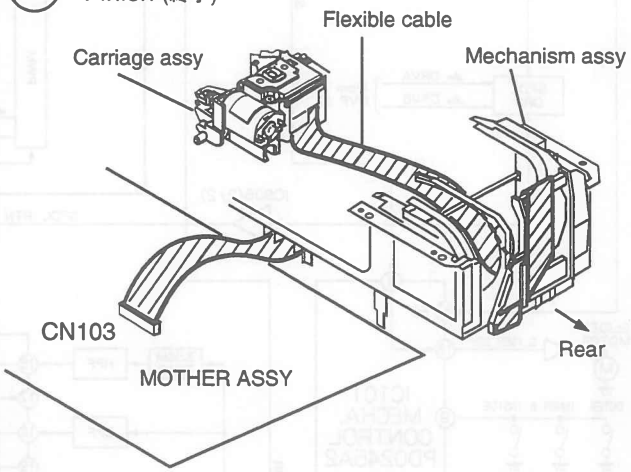

# 7.3 EXPLANATION

## 7.3.1 BLOCK DIAGRAM

### (1) OVERALL BLOCK DIAGRAM

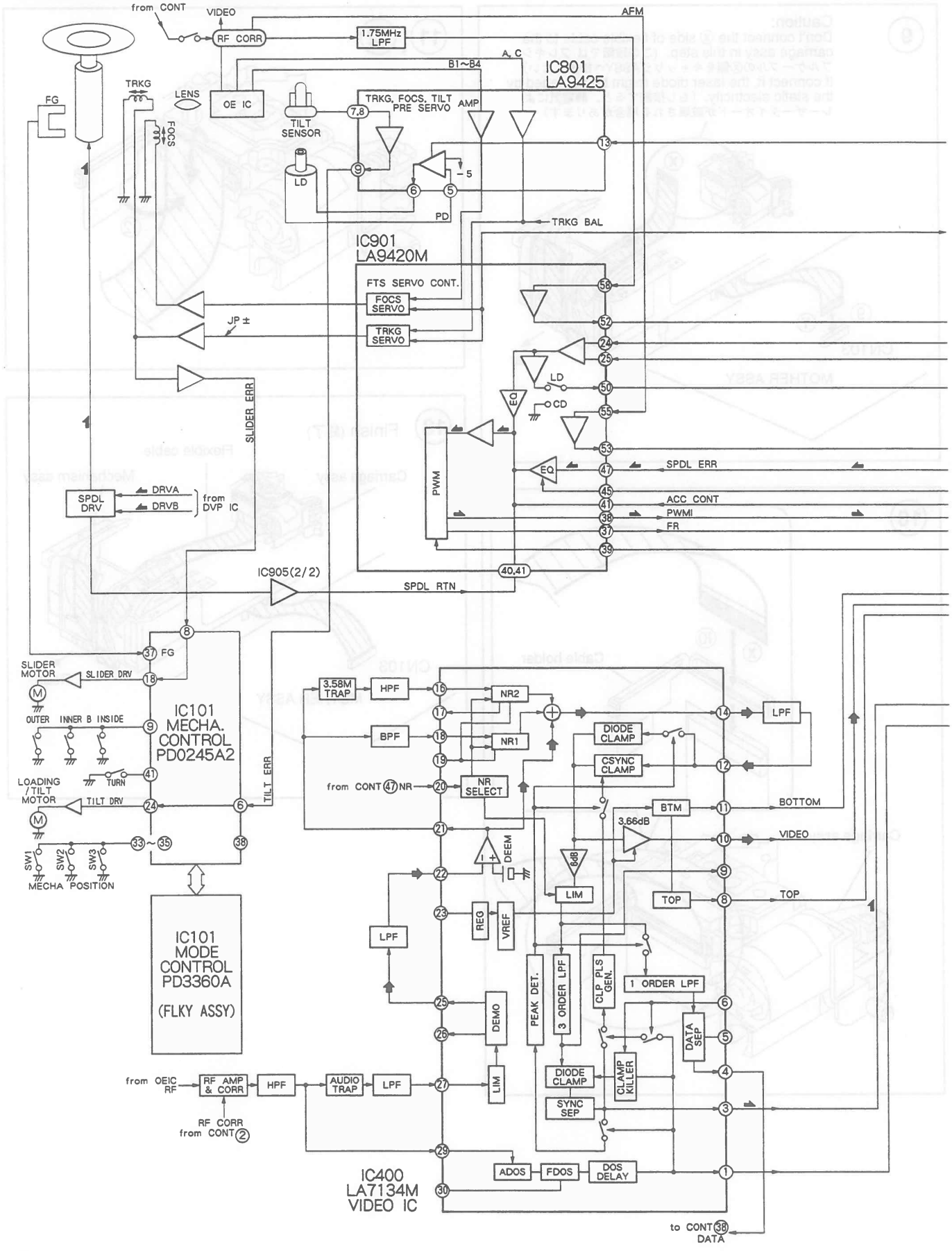

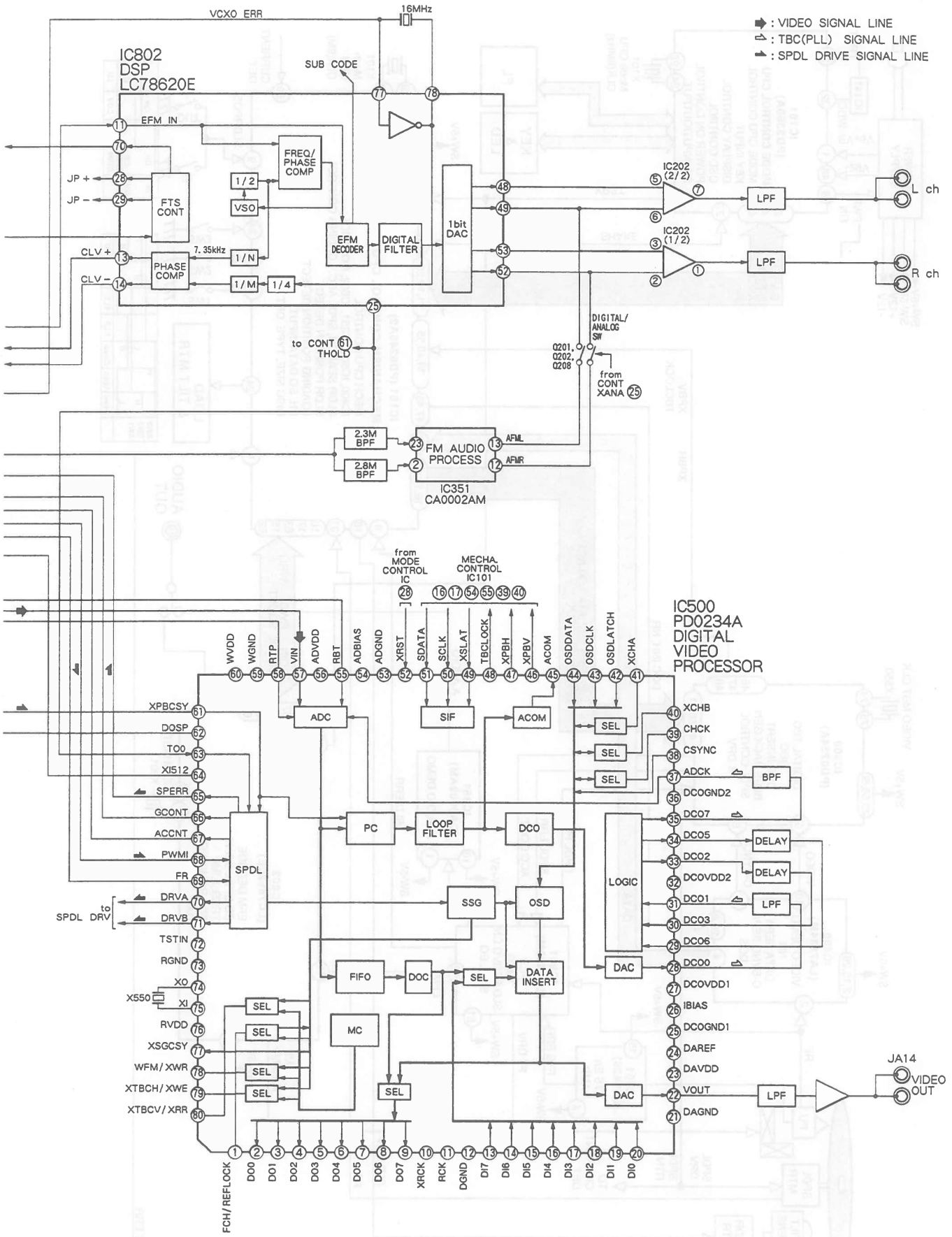
: VIDEO SIGNAL LINE
: TBC(PLL) SIGNAL LINE
: SPDL DRIVE SIGNAL LINE
IC802
DSP
LC78620E
VCXO ERR
16MHz
SUB CODE
EFM IN
FREQ/ PHASE COMP
FTS CONT
1/2
VSO
EFM DECODER
DIGITAL FILTER
1bit DAC
JP +
JP −
CLV +
CLV −
PHASE COMP
7.35kHz
1/N
1/M
1/4
IC202 (2/2)
IC202 (1/2)
LPF
L ch
R ch
to CONT 61 THOLD
DIGITAL/ ANALOG SW
Q201, Q202, Q208
from CONT XANA 25
2.3M BPF
2.8M BPF
FM AUDIO PROCESS
AFML
AFMR
IC351
CA0002AM
from MODE CONTROL IC 28
MECHA. CONTROL IC101
16 17 54 55 39 40
IC500
PD0234A
DIGITAL VIDEO PROCESSOR
WVDD WGND RTP VIN ADVDD RBT ADBIAS ADGND XRST SDATA SCLK XSLAT TBCLOCK XPBH XPBV ACOM OSDDATA OSDCLK OSDLATCH XCHA
60 59 58 57 56 55 54 53 52 51 50 49 48 47 46 45 44 43 42 41
ADC
SIF
ACOM
SEL
XPBCSY 61
DOSP 62
TOO 63
XI512 64
SPERR 65
GCONT 66
ACCNT 67
PWMI 68
FR 69
DRVA 70
DRVB 71
to SPDL DRV
SPDL
PC
LOOP FILTER
DCO
SSG
OSD
LOGIC
DELAY
LPF
BPF
TSTIN 72
RGND 73
XO 74
X550
XI 75
RVDD 76
XSGCSY 77
WFM/ XWR 78
XTBCH/ XWE 79
XTBCV/ XRR 80
FIFO
DOC
DATA INSERT
DAC
MC
XCHB 40
CHCK 39
CSYNC 38
ADCK 37
DCOGND2 36
DCO7 35
DCO5 34
DCO2 33
DCOVDD2 32
DCO1 31
DCO3 30
DCO6 29
DCO0 28
DCOVDD1 27
IBIAS 26
DCOGND1 25
DAREF 24
DAVDD 23
VOUT 22
DAGND 21
JA14
VIDEO OUT
1 2 3 4 5 6 7 8 9 10 11 12 13 14 15 16 17 18 19 20
FCH/REFLOCK DO0 DO1 DO2 DO3 DO4 DO5 DO6 DO7 XRCK RCK DGND DI7 DI6 DI5 DI4 DI3 DI2 DI1 DI0

## (2) SYSTEM BUS BLOCK

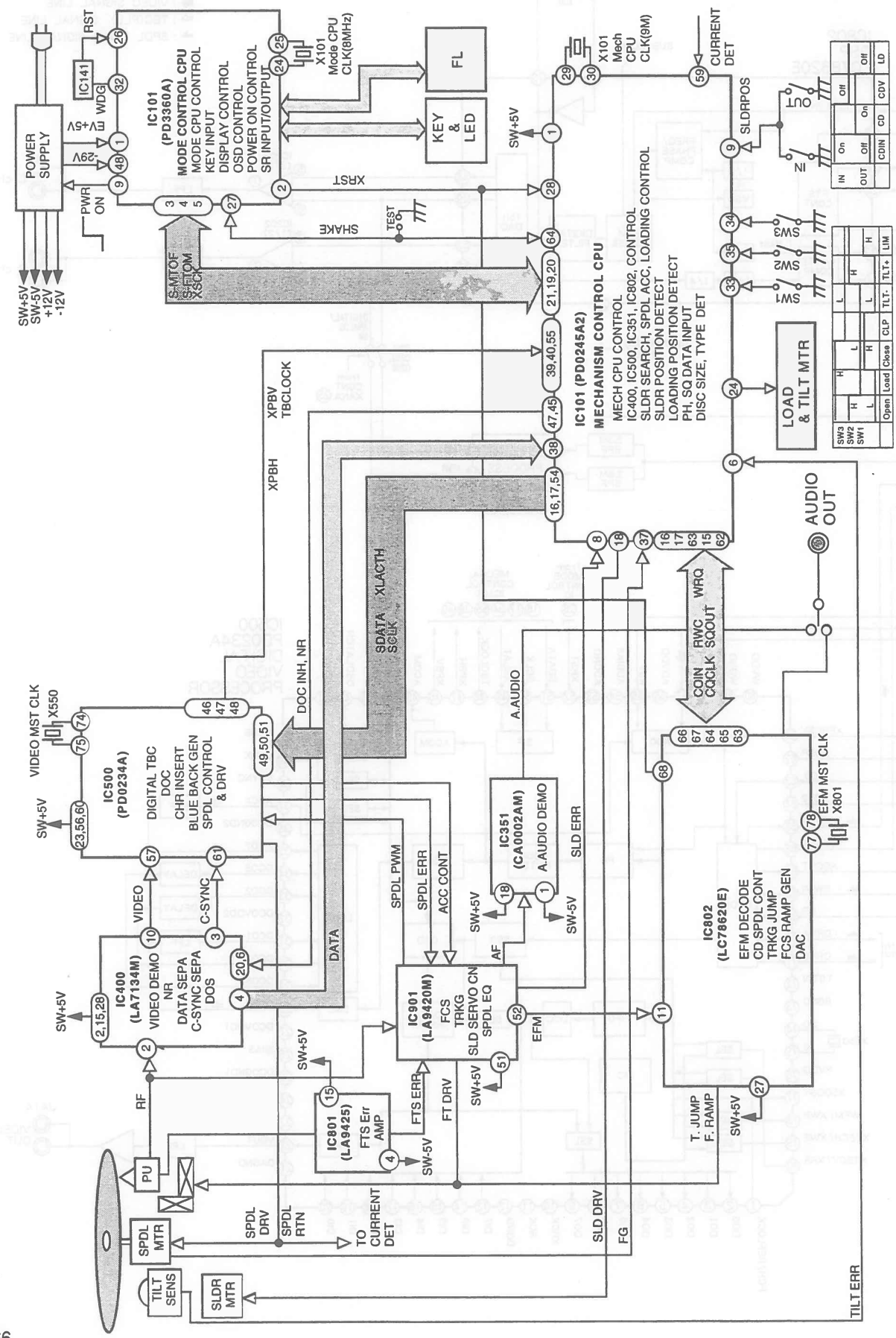

## (3) FOCUS SERVO BLOCK

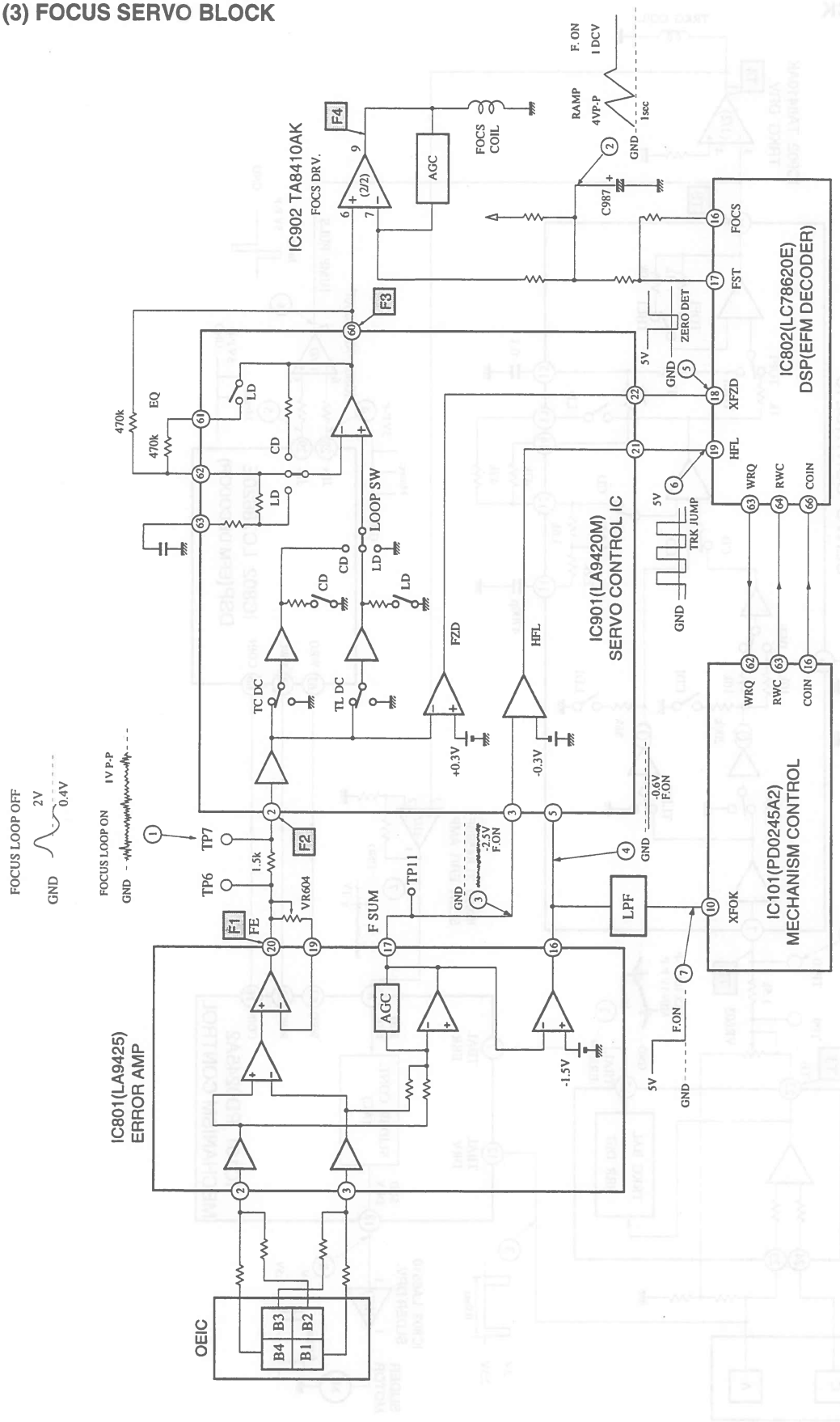

## (4) TRKG & SLDR BLOCK

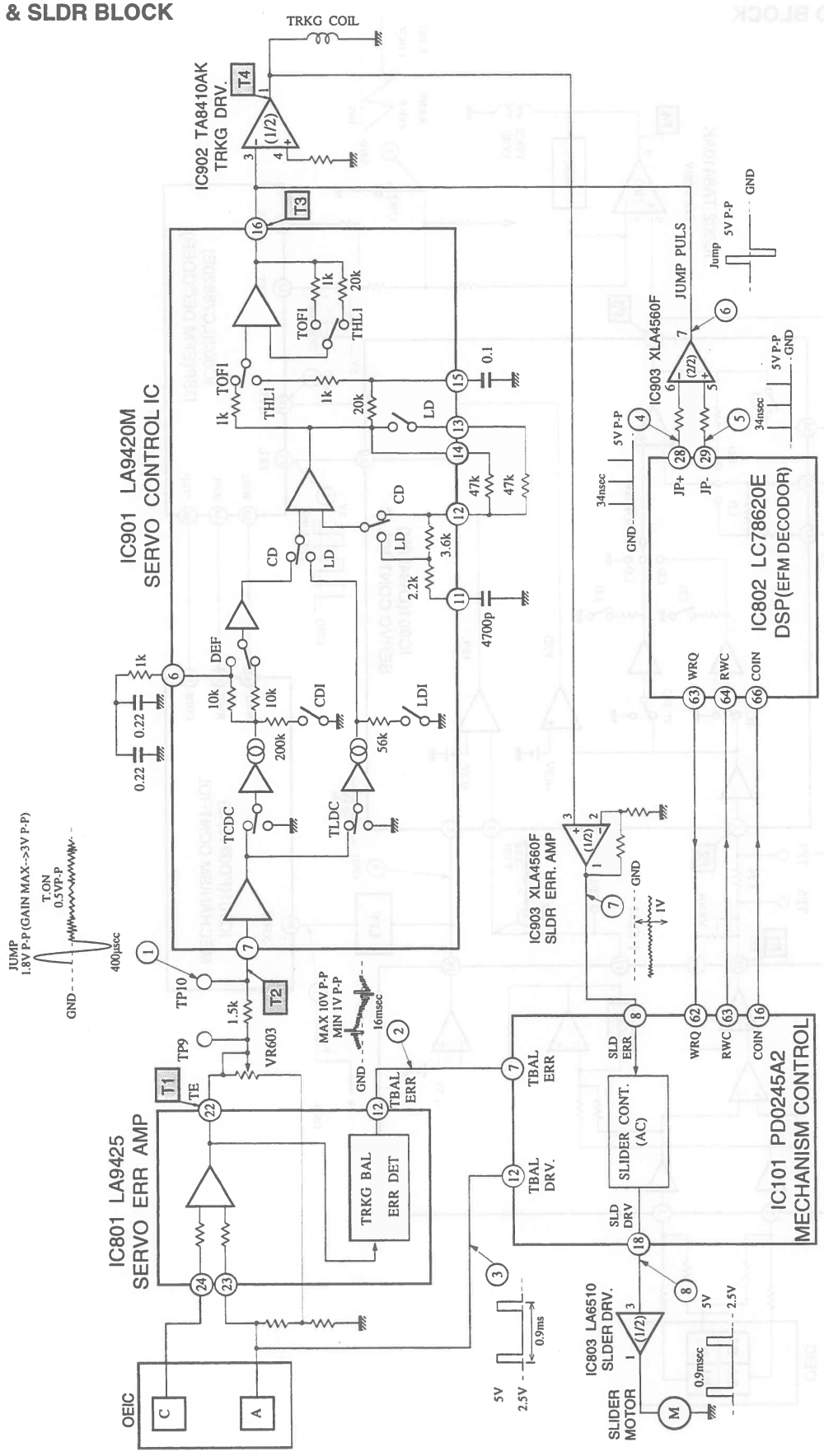

## (5) VIDEO & TBC BLOCK

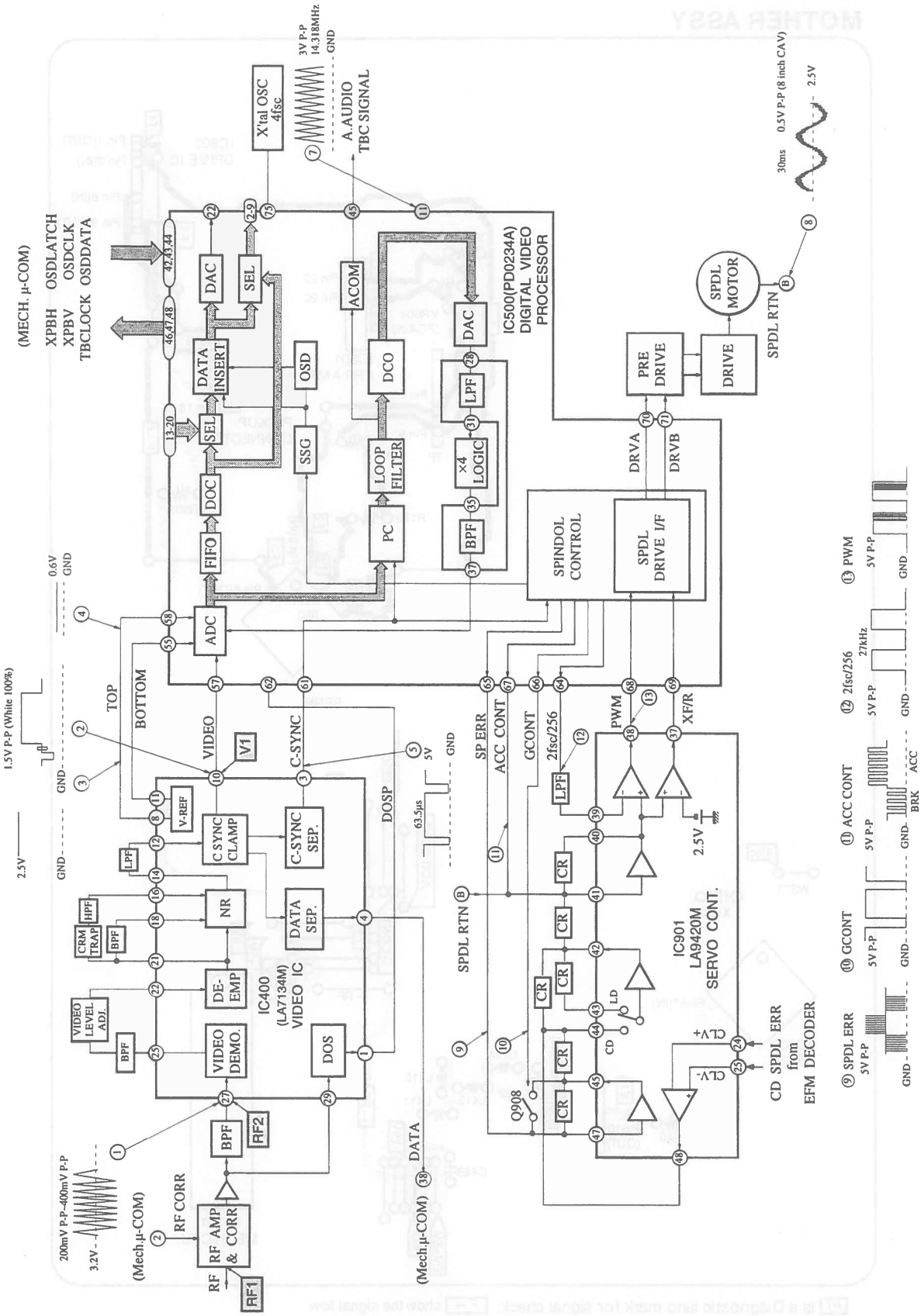

## 7.3.2 DIAGNOSTIC LAND MARK AND PATTERN

### MOTHER ASSY

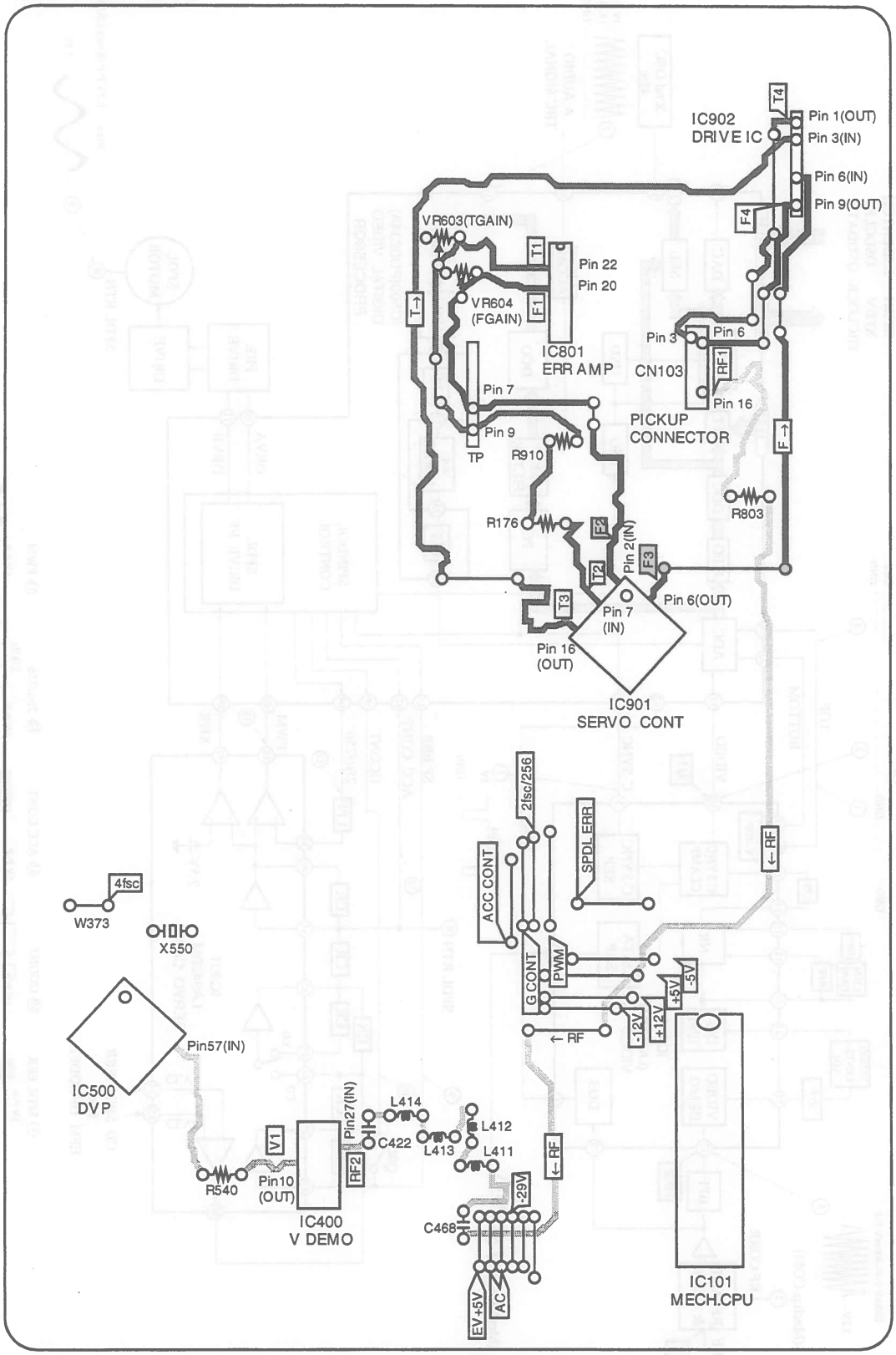


F1 is a Diagnostic land mark for signal check. F→ show the signal flow.

: FOCUS SERVO system.....Signal flow : F1 → F2 → F3 → F4

: TRKG SERVO system.....Signal flow : T1 → T2 → T3 → T4

: RF and VIDEO system.....Signal flow : RF1 → RF2 → V1

# 8. PANEL FACILITIES AND SPECIFICATIONS

## ■ PANEL FACILITIES

### FRONT

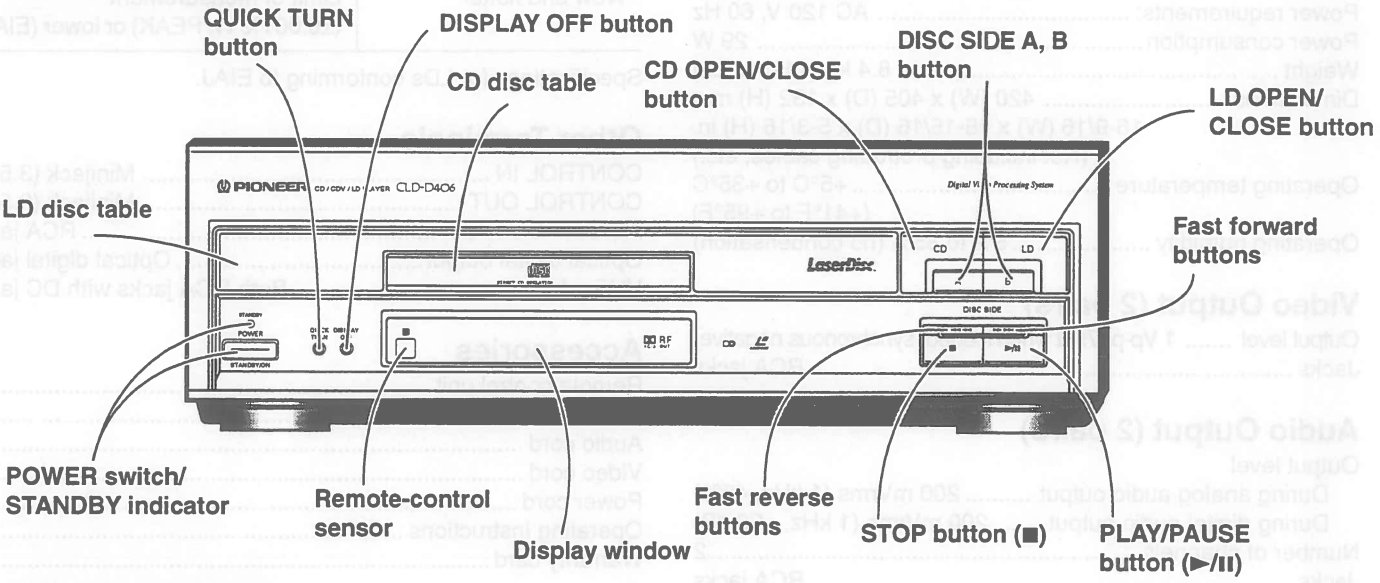


### DISPLAY

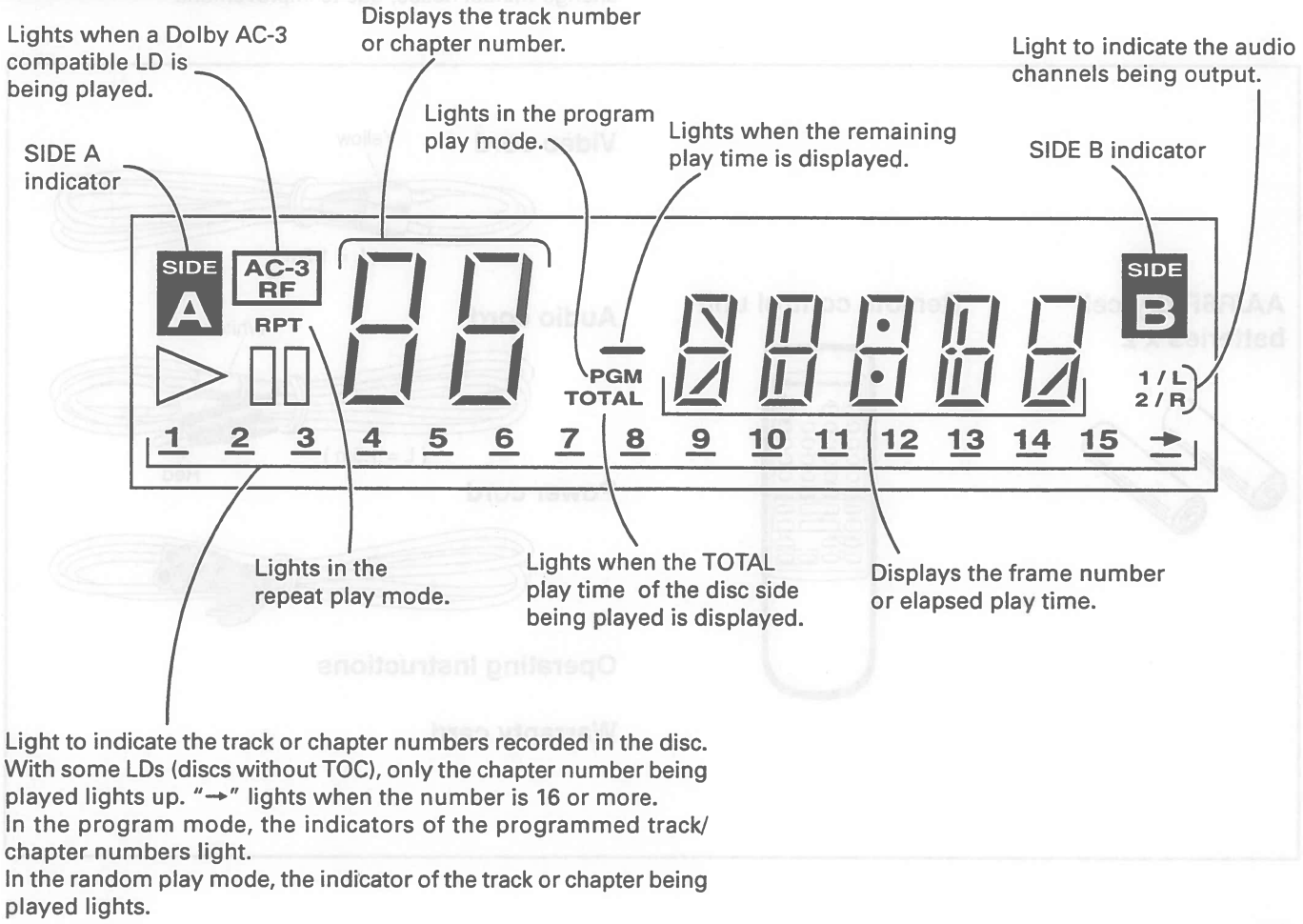


Light to indicate the track or chapter numbers recorded in the disc. With some LDs (discs without TOC), only the chapter number being played lights up. "→" lights when the number is 16 or more.
In the program mode, the indicators of the programmed track/ chapter numbers light.
In the random play mode, the indicator of the track or chapter being played lights.

## ■ SPECIFICATIONS

### General

System ..... LaserVision Disc system and Compact Disc digital audio system
Laser ..... Semiconductor laser: wavelength 780 nm
Power requirements: ..... AC 120 V, 60 Hz
Power consumption ..... 29 W
Weight ..... 6.4 kg (14lb 12 oz)
Dimensions ..... 420 (W) x 405 (D) x 132 (H) mm
16-9/16 (W) x 15-15/16 (D) x 5-3/16 (H) in.
(Not including protruding cables, etc.)
Operating temperature ..... +5°C to +35°C
(+41°F to +95°F)
Operating humidity ..... 5% to 85% (no condensation)

### Video Output (2 pairs)

Output level ..... 1 Vp-p (75Ω when loaded, synchronous negative)
Jacks ..... RCA jacks

### Audio Output (2 pairs)

Output level
During analog audio output ..... 200 mVrms (1 kHz, 40%)
During digital audio output ..... 200 mVrms (1 kHz, –20 dB)
Number of channels ..... 2
Jacks ..... RCA jacks

Digital audio characteristics

| | |
|---|---|
| Frequency response | 4 Hz to 20 kHz |
| S/N ratio | 102 dB (EIAJ) |
| Wow and flutter | Limit of measurement (±0.001% W. PEAK) or lower (EIAJ) |

Specifications for LDs conforming to EIAJ.

### Other Terminals

CONTROL IN ..... Minijack (3.5ø)
CONTROL OUT ..... Minijack (3.5ø)
AC-3-RF OUTPUT ..... RCA jack
Optical digital output ..... Optical digital jack
VHF adapter ..... Both RCA jacks with DC jack

### Accessories

Remote control unit ..... 1
AA/R6P dry cell batteries ..... 2
Audio cord ..... 1
Video cord ..... 1
Power cord ..... 1
Operating Instructions ..... 1
Warranty card ..... 1

**NOTE:**
The specifications and design of this product are subject to change without notice, due to improvement.

**AA/R6P dry cell batteries x 2**

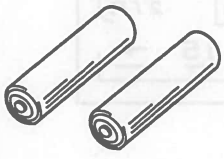

**Remote control unit**

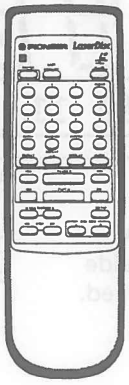

**Video cord**

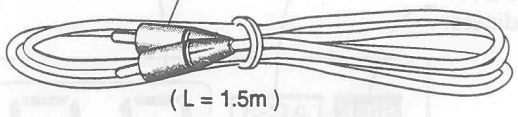


**Audio cord**

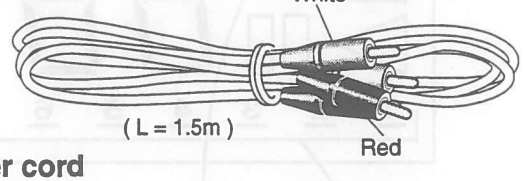


**Power cord**

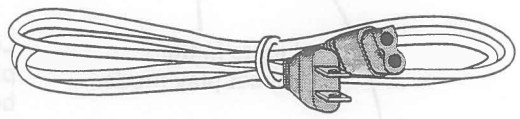

**Operating Instructions**

**Warranty card**